4. AC ADAPTOR SCHEMATIC DIAGRAM

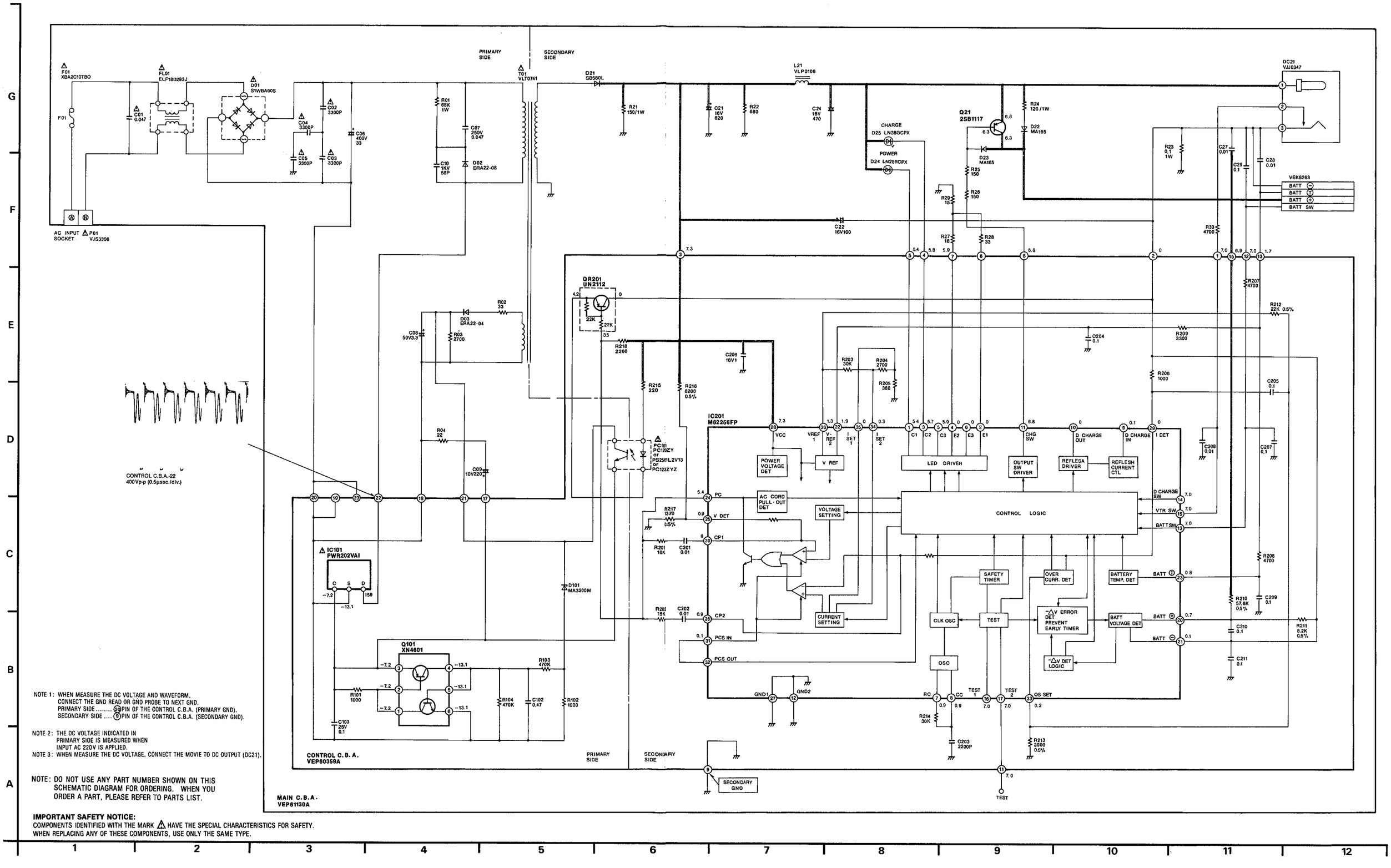

NOTE 1: WHEN MEASURE THE DC VOLTAGE AND WAVEFORM, CONNECT THE GND READ OR GND PROBE TO NEXT GND.
PRIMARY SIDE ..... ⓐ PIN OF THE CONTROL C.B.A. (PRIMARY GND).
SECONDARY SIDE .... ⓑ PIN OF THE CONTROL C.B.A. (SECONDARY GND).

NOTE 2: THE DC VOLTAGE INDICATED IN PRIMARY SIDE IS MEASURED WHEN INPUT AC 220V IS APPLIED.

NOTE 3: WHEN MEASURE THE DC VOLTAGE, CONNECT THE MOVIE TO DC OUTPUT (DC21).

NOTE: DO NOT USE ANY PART NUMBER SHOWN ON THIS SCHEMATIC DIAGRAM FOR ORDERING. WHEN YOU ORDER A PART, PLEASE REFER TO PARTS LIST.

IMPORTANT SAFETY NOTICE:
COMPONENTS IDENTIFIED WITH THE MARK ⚠ HAVE THE SPECIAL CHARACTERISTICS FOR SAFETY. WHEN REPLACING ANY OF THESE COMPONENTS, USE ONLY THE SAME TYPE.