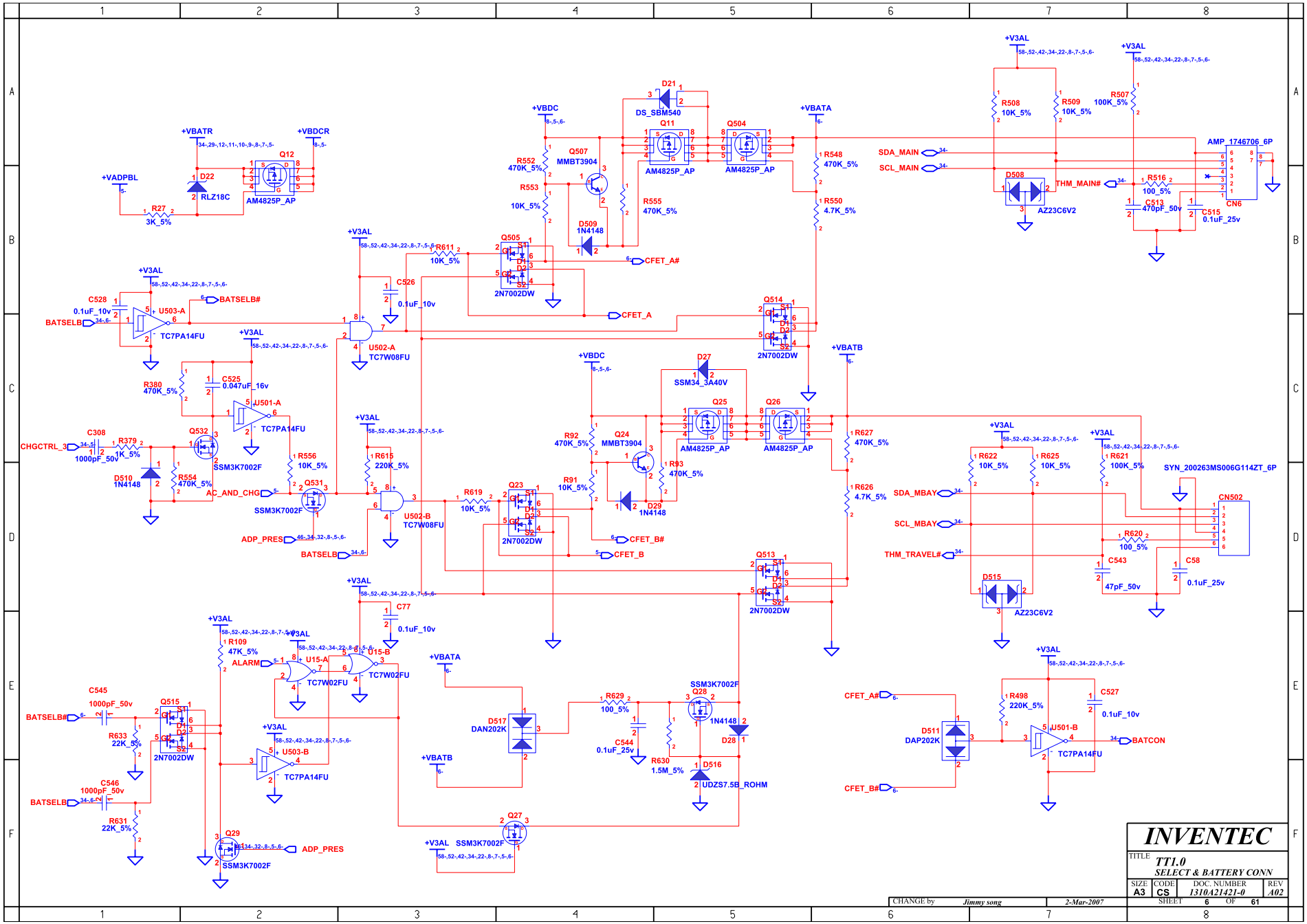

INVENTEC

TITLE: TT1.0
SELECT & BATTERY CONN

SIZE	CODE	DOC. NUMBER	REV
A3	CS	1310A21421-0	A02

SHEET 6 OF 61

CHANGE by	Jimmy song	2-Mar-2007