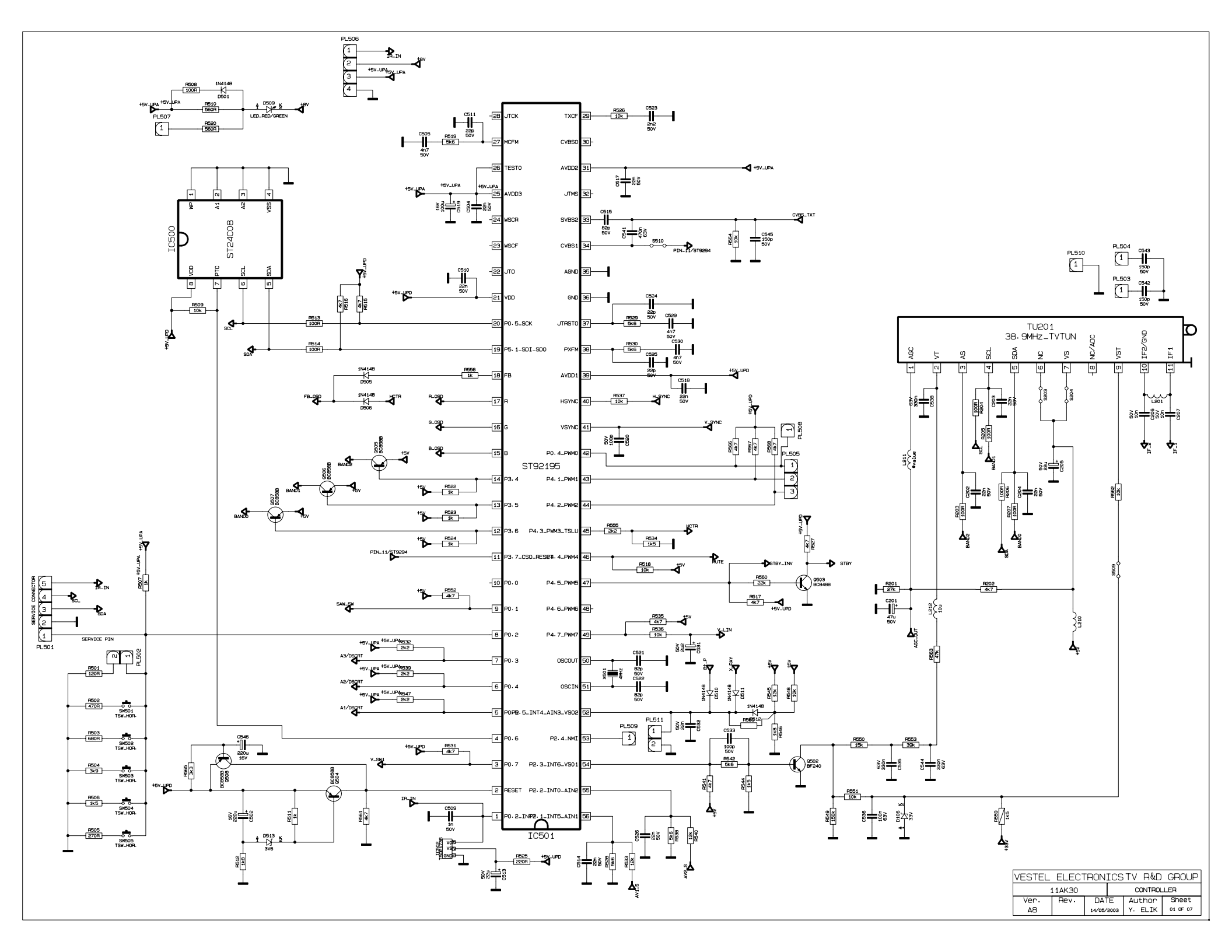
ST92195
IC501
IC500
ST24C08
TU201
38.9MHz_TVTUN
PL501
PL502
PL503
PL504
PL505
PL506
PL507
PL508
PL509
PL510
PL511
SERVICE CONNECTOR
SERVICE PIN
VESTEL ELECTRONICS TV R&D GROUP
11AK30
CONTROLLER
Ver.
A8
Rev.
DATE
14/05/2003
Author
Y. ELIK
Sheet
01 OF 07

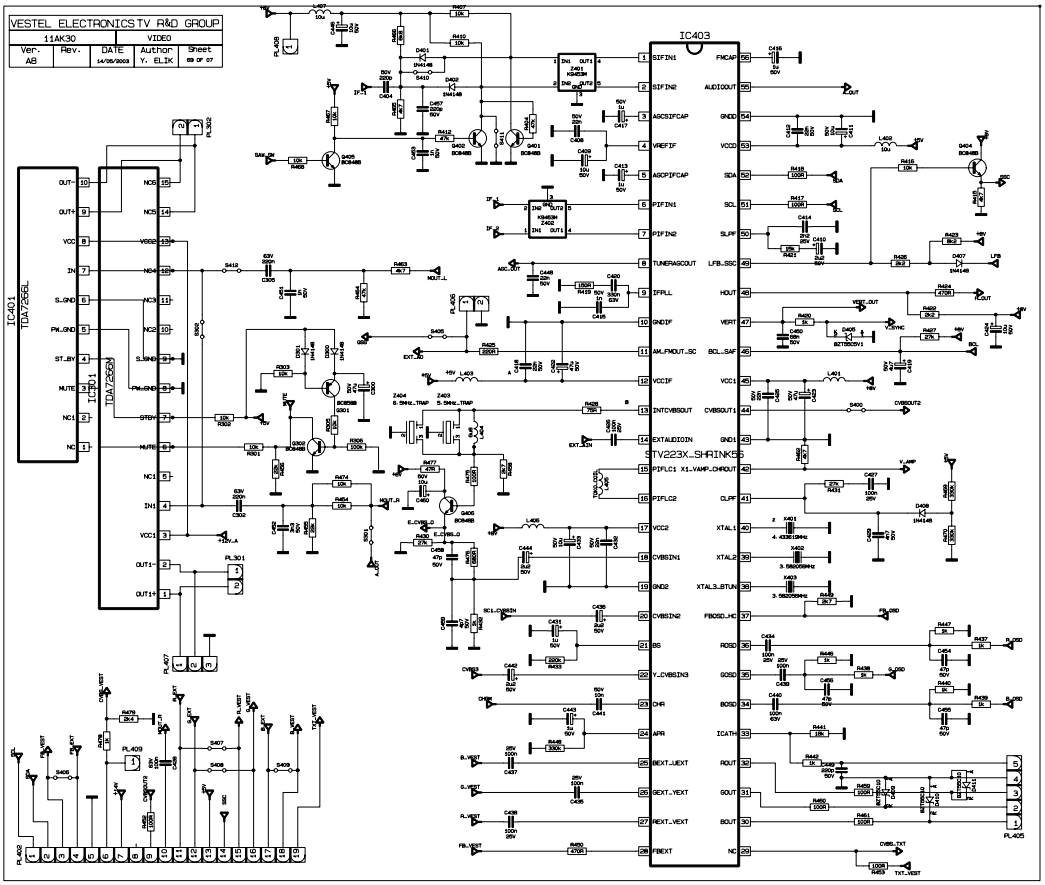
VESTEL ELECTRONICS TV R&D GROUP
11AK30
VIDEO
Ver. A8
Rev.
DATE 14/05/2003
Author Y. ELIK
Sheet 69 OF 07
IC403
STV223X_SHRINK56
IC401
TDA7266L
IC301
TDA7266M

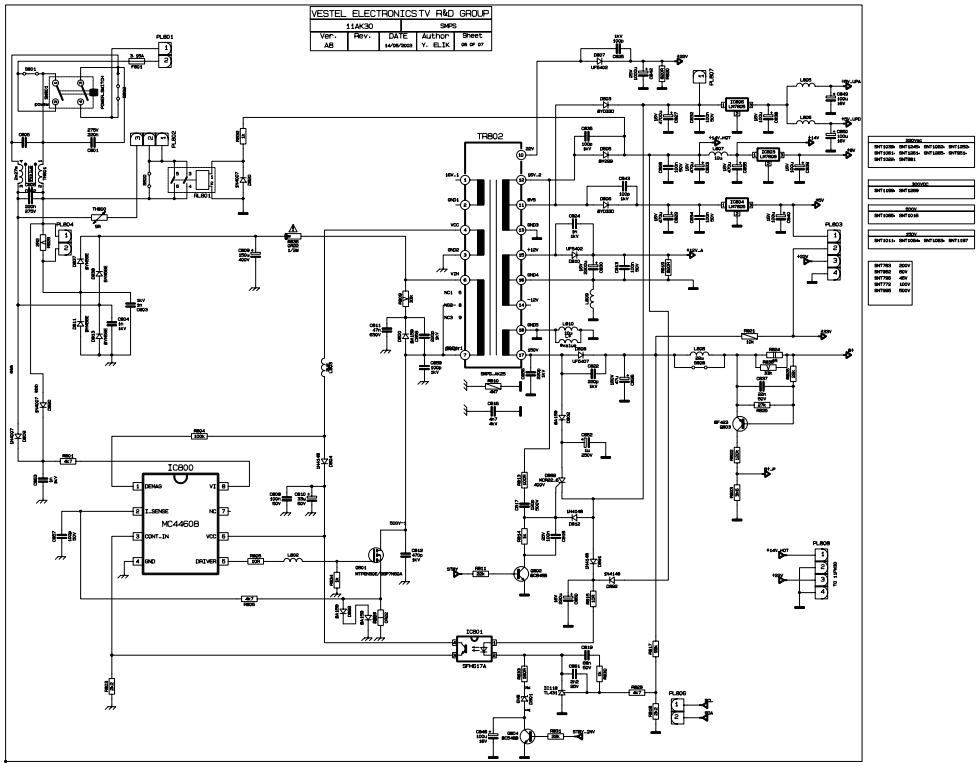
VESTEL ELECTRONICS TV R&D GROUP
11AK30
SMPS
Ver.
AB
Rev.
DATE
14/05/2003
Author
Y. ELIK
Sheet
06 OF 07
TR802
IC800
MC44608
IC801
SFH617A
PL801
PL803
PL804
PL806
PL808

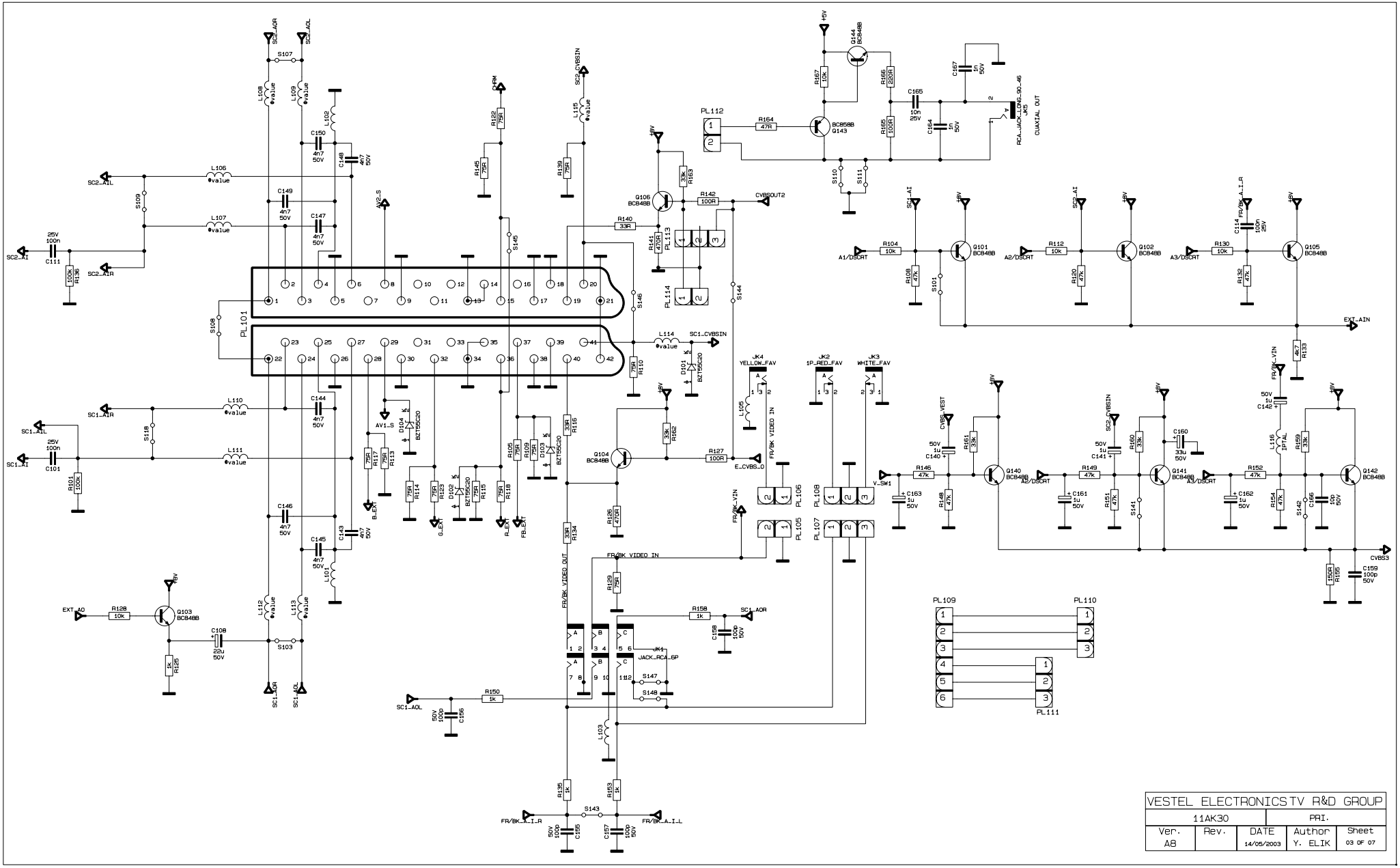

VESTEL ELECTRONICS TV R&D GROUP				
11AK30		PRI.		
Ver.	Rev.	DATE	Author	Sheet
A8		14/05/2003	Y. ELIK	03 OF 07

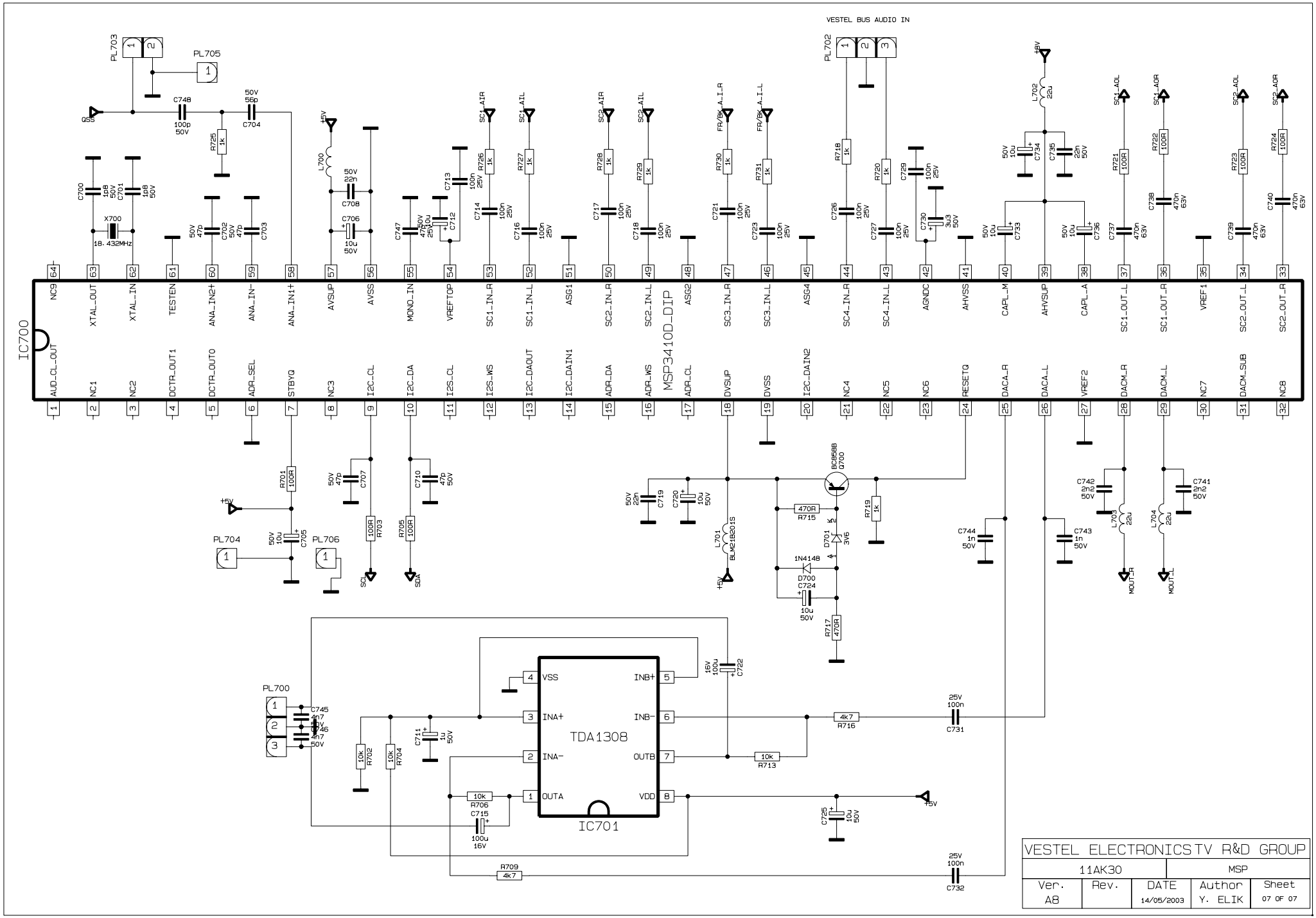
VESTEL BUS AUDIO IN
IC700
MSP3410D_DIP
TDA1308
IC701
PL700
PL702
PL703
PL704
PL705
PL706
VESTEL ELECTRONICS TV R&D GROUP
11AK30
MSP
Ver. A8
Rev.
DATE 14/05/2003
Author Y. ELIK
Sheet 07 OF 07

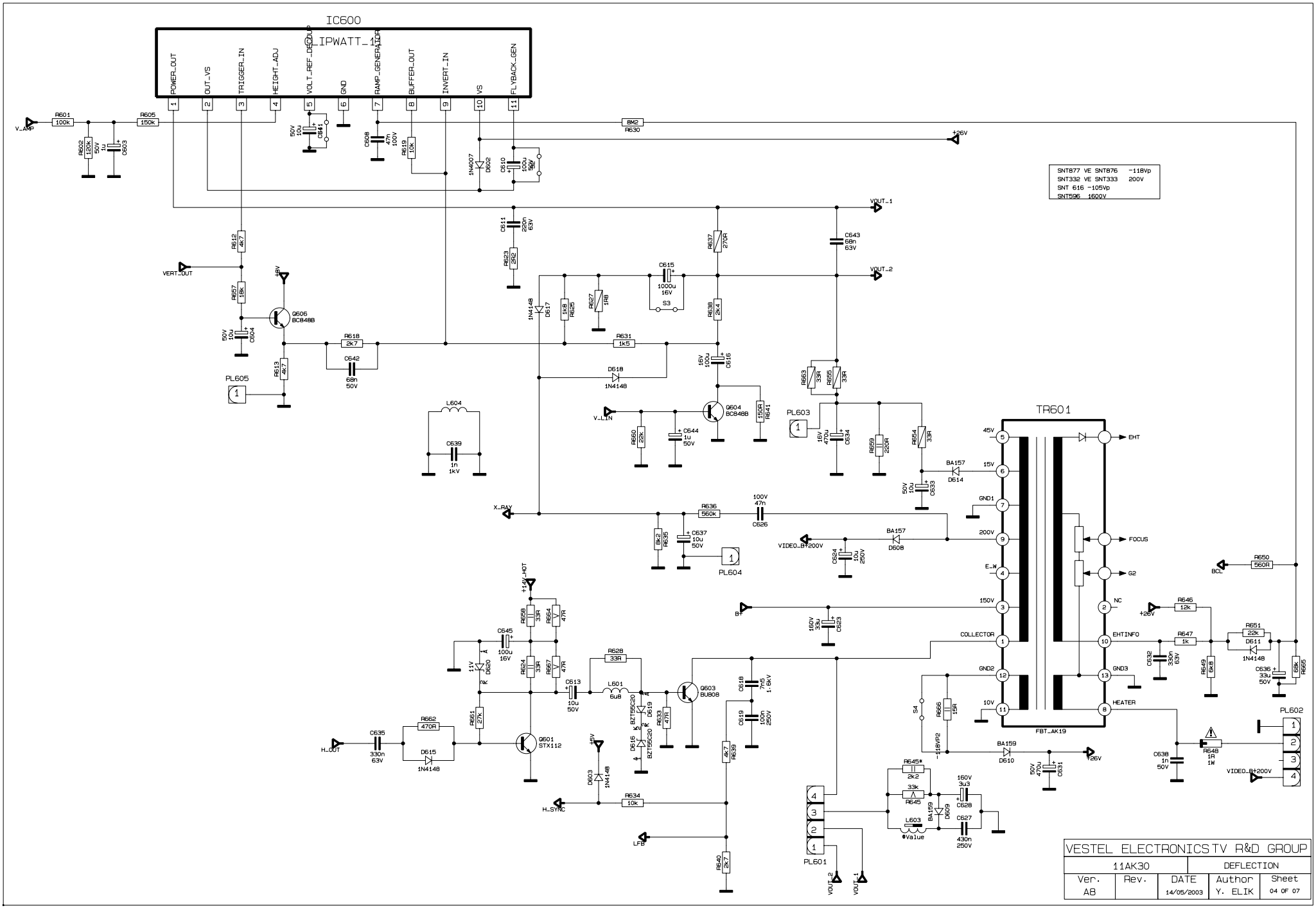
IC600
CLIPWATT_1
POWER_OUT
OUT_VS
TRIGGER_IN
HEIGHT_ADJ
VOLT_REF_DECOUP
GND
RAMP_GENERATOR
BUFFER_OUT
INVERT_IN
VS
FLYBACK_GEN
V_AMP
VERT_OUT
VOUT_1
VOUT_2
V_LIN
X_RAY
VIDEO_B+200V
H_OUT
H_SYNC
LFB
BCL
+26V
+14V_HOT
TR601
FBT_AK19
EHT
FOCUS
G2
NC
EHTINFO
HEATER
COLLECTOR
GND1
GND2
GND3
E_W
45V
15V
200V
150V
10V
PL601
PL602
PL603
PL604
PL605
Q601 STX112
Q603 BU808
Q604 BC848B
Q606 BC848B
SNT877 VE SNT876 -118Vp
SNT332 VE SNT333 200V
SNT 616 -105Vp
SNT596 1600V
VESTEL ELECTRONICS TV R&D GROUP
11AK30
DEFLECTION
Ver. A8
Rev.
DATE 14/05/2003
Author Y. ELIK
Sheet 04 OF 07

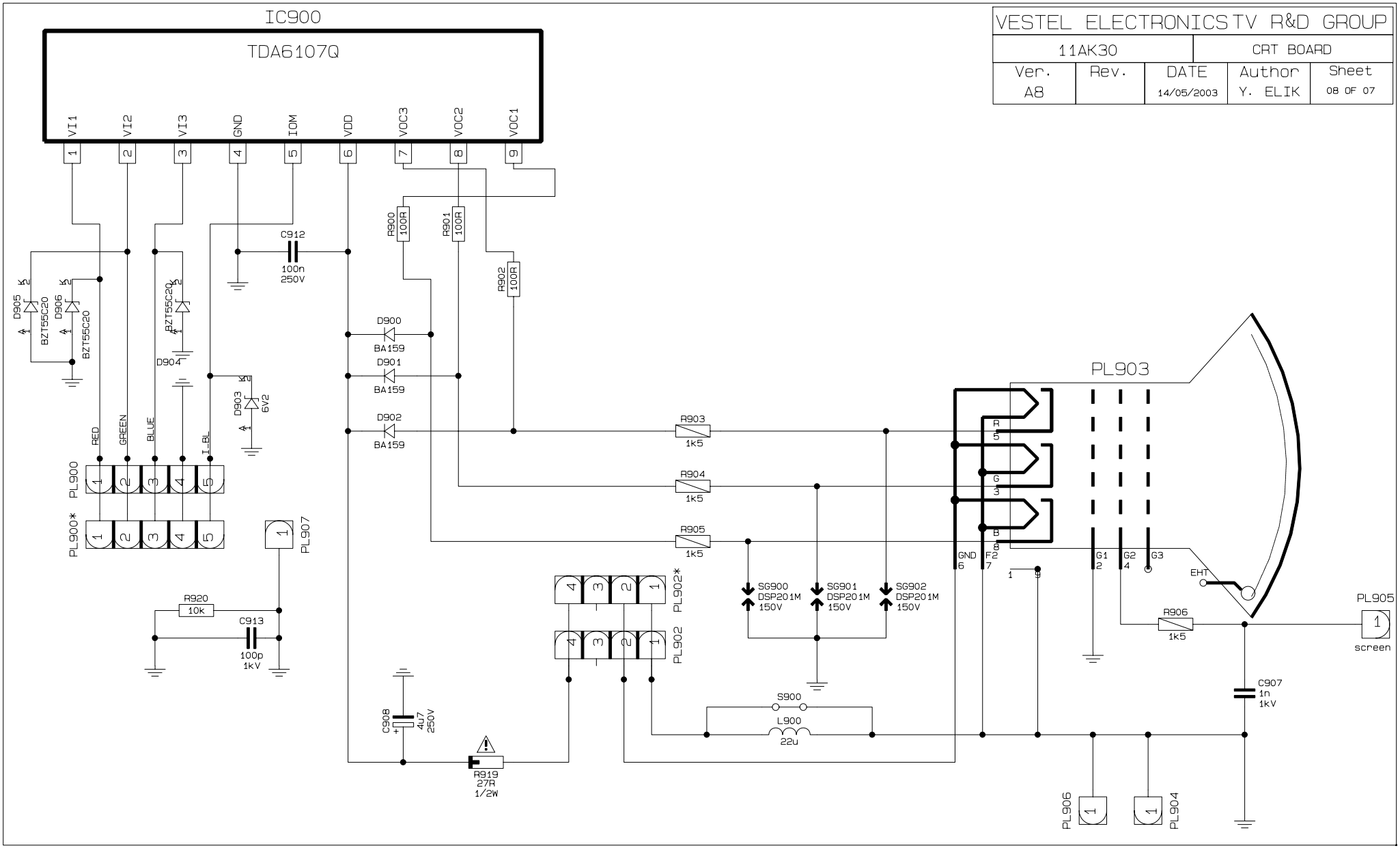
IC900
TDA6107Q
VI1
VI2
VI3
GND
IOM
VDD
VOC3
VOC2
VOC1
C912
100n
250V
R900
100R
R901
100R
R902
100R
D905
BZT55C20
D906
BZT55C20
BZT55C20
D904
D903
6V2
D900
BA159
D901
BA159
D902
BA159
RED
GREEN
BLUE
I_BL
PL900
PL900*
PL907
R903
1k5
R904
1k5
R905
1k5
R920
10k
C913
100p
1kV
PL902*
PL902
SG900
DSP201M
150V
SG901
DSP201M
150V
SG902
DSP201M
150V
S900
L900
22u
C908
4u7
250V
R919
27R
1/2W
PL903
R
G
B
GND
G1
G2
G3
EHT
R906
1k5
PL905
screen
C907
1n
1kV
PL906
PL904
VESTEL ELECTRONICS TV R&D GROUP
11AK30
CRT BOARD
Ver.
A8
Rev.
DATE
14/05/2003
Author
Y. ELIK
Sheet
08 OF 07

CONTENTS

SAFETY PRECAUTIONS: 2
TV set switched off 2
Measurements 2
PERI-TV SOCKET 2
SCART 1 2
SCART 2 2
1. INTRODUCTION 2
2. SMALL SIGNAL PART WITH STV2248 3
2.1 Vision IF amplifier 3
2.2 QSS Sound circuit (QSS versions) 3
2.3 FM demodulator and audio amplifier (mono versions) 3
2.4 Video switch 3
2.5 Synchronisation circuit 3
2.6 Chroma and luminance processing 4
2.7 RGB output circuit 4
2.8 □-Controller 5
3. TUNER 5
4- DIGITAL TV SOUND PROCESSOR MSP34X0 5
5. SOUND OUTPUT STAGE TDA7266L/TDA7266 5
6. VERTICAL OUTPUT STAGE WITH TDA8174A 6
7. VIDEO OUTPUT AMPLIFIER STV5112 6
8. POWER SUPPLY (SMPS) 6
9. POWER FACTOR CORRECTION 6
10. SERIAL ACCESS CMOS 8K EEPROM 24C08 6
11. CLASS AB STEREO HEADPHONE DRIVER TDA1308 6
12. SAW FILTERS 6
13. IC DESCRIPTIONS AND INTERNAL BLOCK DIAGRAM 6
• ST92195 7
• STV224X 8-9
• UV1315, UV1316, UV1336 9
• TDA7266/TDA7266L 9-10
• TDA8174AW 10
• STV5112 11
• MC44608 11-12
• MSP34X0G 12
• 24C08 12-13
• TDA1308 13
• SAW FILTERS 13
CIRCUIT DESCIRIPTION 14-18
AK30 CHASSIS MANUAL ADJUSTMENT PROCEDURE 19-21
OPTIONAL SETTINGS 22-23
TUNER SETTING 24
14. BLOCK DIAGRAM of 11AK30 25
BLOCK DIAGRAM of 11AK30 SMPS 26
BLOCK DIAGRAM of 11AK30 uCONTROLLER 27
BLOCK DIAGRAM of 11AK30 VIDEO 28
BLOCK DIAGRAM of 11AK30 STEREO 29
BLOCK DIAGRAM of 11AK30 SCART 30
BLOCK DIAGRAM of 11AK30 DEFLECTION 31
BLOCK DIAGRAM of 11AK30 BASE BOADR 32
15. CIRCUIT DIAGRAM of VIDEO PRECESSOR 33
CIRCUIT DIAGRAM of SMPS 34
CIRCUIT DIAGRAM of MICRO CONTROLLER 35
CIRCUIT DIAGRAM of AUDIO-VIDEO 36
CIRCUIT DIAGRAM of DEFLECTION 37
CIRCUIT DIAGRAM of STEREO 38
WAVEFORMS 39

DO NOT CHANGE ANY MODULE UNLESS THE SET IS SWITCHED OFF
The mains supply part of the switch mode power supply's transformer is live.
Use an isolating transformer.
The receiver complies with the safety requirements.

SAFETY PRECAUTIONS:

The service of this TV set must be carried out by qualified persons only. Components marked with the warning symbol on the circuit diagram are critical for safety and must only be replaced with an identical component.
- Power resistor and fused resistors must be mounted in an identical manner to the original component.
- When servicing this TV, check that the EHT does not exceed 26kV.

TV set switched off:
Make short-circuit between HV-CRT clip and CRT ground layer.
Short C809 before changing IC800 and IC801 or other components in primary side of the SMPS part.

Measurements:
Voltage readings and oscilloscope traces are measured under the following conditions:
Antenna signal's level is 60dB at the color bar pattern from the TV pattern generator. (100% white, 75% color saturation)
Brightness, contrast, and color are adjusted for normal picture performance.
Mains supply, 220VAC, 50Hz.

PERI-TV SOCKET

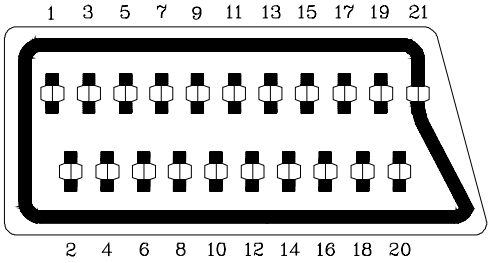

SCART 1 (SC050)

1	Audio right output	0.5Vrms / 1K
2	Audio right input	0.5Vrms / 10K
3	Audio left output	0.5Vrms / 1K
4	Ground AF	
5	Ground Blue	
6	Audio left input	0.5Vrms / 10K
7	Blue input	0.7Vpp / 75ohm
8	AV switching input	0-12VDC /10K
9	Ground Green	
10	-	
11	Green input	0.7Vpp / 75ohm
12	-	
13	Ground Red	
14	Ground Blanking	
15	Red input	0.7Vpp / 75ohm
16	Blanking input	0-0.4VDC, 1-3VDC / 75ohm
17	Ground CVBS output	
18	Ground CVBS input	
19	CVBS output	1Vpp / 75ohm
20	CVBS input	1Vpp / 75ohm
21	Ground	

SCART 2 (SC051)

1	Audio right output	0.5Vrms / 1K
2	Audio right input	0.5Vrms / 10K
3	Audio left output	0.5Vrms / 1K
4	Ground AF	
5	Ground Blue	
6	Audio left input	0.5Vrms / 10K
7	Blue input	0.7Vpp / 75ohm
8	AV switching input	0-12VDC /10K
9	Ground Green	
10	-	
11	-	
12	-	
13	Ground Red	
14	Ground Blanking	
15	-	
16	-	
17	Ground CVBS output	
18	Ground CVBS input	
19	CVBS output	1Vpp / 75ohm
20	CVBS input	1Vpp / 75ohm
21	Ground	

1. INTRODUCTION

11AK30 is a 90° chassis capable of driving 20"/21" tubes at the appropriate currents. The chassis is capable of operating in PAL, SECAM and NTSC standards. The sound system is capable of giving 5 watts RMS output into a load of 8 ohms. One page, 7 page SIMPLETEXT, TOPTEXT, FASTTEXT and US Closed Caption is also provided. The chassis is equipped with a double-deck 42 pin Scart connector.

2. SMALL SIGNAL PART WITH STV2248:

STV2248 video processor is essential for realizing all small signal functions for a color TV receiver.

2.1 Vision IF amplifier3

The vision IF amplifier can demodulate signals with positive and negative modulation. The PLL demodulator is completely alignment-free. Although the VCO (Toko-coil) of the PLL circuit is external, yet the frequency is fixed to the required value by the original manufacturer thus the Toko-coil does not need to be adjusted manually. The setting of the various frequencies (38.9 or 45.75 MHz) can be made via changing the coil itself.

2.2 QSS Sound circuit (QSS versions)

The sound IF amplifier is similar to the vision IF amplifier and has an external AGC de-coupling capacitor. The single reference QSS mixer is realised by a multiplier. In this multiplier the SIF signal is converted to the inter-carrier frequency by mixing it with the regenerated picture carrier from the VCO. The mixer output signal is supplied to the output via a high-pass filter for attenuation of the residual video signals. With this system a high performance hi-fi stereo sound processing can be achieved. The AM sound demodulator is realised by a multiplier. The modulated sound IF signal is multiplied in phase with the limited SIF signal. The demodulator output signal is supplied to the output via a low-pass filter for attenuation of the carrier harmonics. The AM signal is supplied to the output via the volume control.

2.3. AM DEMODULATOR

The AM demodulated signal results from multiplying the input signal by itself, it is available on AM/FM output.

2.3 FM demodulator and audio amplifier (mono versions):

The FM demodulator is realized as narrow-band PLL with external loop filter, which provides the necessary selectivity without using an external band-pass filter. To obtain a good selectivity a linear phase detector and constant input signal amplitude are required. For this reason the inter-carrier signal is internally supplied to the demodulator via a gain controlled amplifier and AGC circuit. The nominal frequency of the demodulator is tuned to the required frequency (4.5/ 5.5/6.0/6.5 MHz) by means of a calibration circuit that uses the clock frequency of the □-controller/Teletext decoder as a reference. The setting to the wanted frequency is realized by means of the software. It can be read whether the PLL frequency is inside or outside the window and whether the PLL is in lock or not. With this information it is possible to make an automatic search system for the incoming sound frequency. This is realized by means of a software loop that alternate the demodulator to various frequencies, then select the frequency on which a lock condition has been found. De-emphasis output signal amplitude is independent of the TV standard and has the same value for a frequency deviation of ±25 kHz at the 4.5 MHz standard and for a deviation of ±50 kHz for the other standards. When the IF circuit is switched to positive modulation the internal signal on de-emphasis pin is automatically muted. The audio control circuit contains an audio switch and volume control. In the mono inter-carrier sound versions the Automatic Volume Leveling (AVL) function can be activated. The pin to which the external capacitor has to be connected depends on the IC version. For the 90° types the capacitor is connected to the EW output pin (pin 20). When the AVL is active it automatically stabilizes the audio output signal to a certain level.

2.4 Video switching

The video processor (STV2248C) has three CVBS inputs and two RGB inputs. The first CVBS input is used for external CVBS from SCART 1, the second is used for either CVBS or Y/C from either SCART2 or BAV/FAV, and the third one is used for internal video. The selection between both external video inputs signals is realized by means of software and hardware switches.

2.5 Synchronization circuit

The video processor (STV224X) performs the horizontal and vertical processing. The external horizontal deflection circuit is controlled via the Horizontal output pulse (HOUT). The vertical scanning is performed through an external ramp generator and a vertical power amplifier IC controlled by the Vertical output pulse (VOUT).

The main components of the deflection circuit are:

- PLL1: the first phase locked loop that locks the internal line frequency reference on the CVBS input signal. It is composed of an integrated VCO (12 MHz) that requires the chroma Reference frequency (4.43MHz or 3.58MHz crystal oscillator reference signal), a divider by 768, a line decoder, and a phase comparator.
- PLL2: The second phase locked loop that controls the phase of the horizontal output (Compensation of horizontal deflection transistor storage time variation). Also the horizontal position adjustment is also performed in PLL2.
- A vertical pulse extractor.
- A vertical countdown system to generate all vertical windows (vertical synchronization window, frame blanking pulses, 50/60Hz identification window...).
- Automatic identification of 50/60Hz scanning.
- PLL1 time constant control.
- Noise detector, video identification circuits, and horizontal coincidence detector.
- Vertical output stage including de-interlace function, vertical position control.
- Vertical amplitude control voltage output (combined with chroma reference output and Xtal 1 indication).

2.6 Chroma and luminance processing:

The chroma decoder is able to demodulate PAL, NTSC and SECAM signals. The decoder dedicated to PAL and NTSC sub-carrier is based on a synchronous demodulator, and an Xtal PLL locked on the phase reference signal (burst).
The SECAM demodulation is based on a PLL with automatic calibration loop.
The color standard identification is based on the burst recognition.
Automatic and forced modes can be selected through the I2C bus.
NTSC tint, and auto flesh are controlled through I2C bus.
Xtal PLL can handle up to 3 crystals to work in PAL M, PAL N and NTSC M for South America.
ACC an ACC overload control the chroma sub-carrier amplitude within 26dB range. Both
ACC s are based on digital systems and do not need external capacitor.
All chroma filters are fully integrated and tuned via a PLL locked on Xtal VCO signal.
A second PLL is used for accurate fine-tuning of the SECAM bell filter. This tuning is achieved during the frame blanking.
An external capacitor memorizes the bell filter tuning voltage.
A base-band chroma delay-line rebuilds the missing color line in SECAM and removes transmission phase errors in PAL.
The base-band chroma delay line is clocked with 6MHz signal provided by the horizontal scanning VCO.
The luminance processor is composed of a chroma trap filter, a luminance delay line, a peaking function with noise coring feature, a black stretch circuit.
Trap filter and luminance delay lines are achieved with the use of bi-quad integrated filters, auto-aligned via a master filter phase locked loop.

2.7 RGB output circuit:

The video processor performs the R, G, B processing.
There are three sources:

1. Y,U,V inputs (coming from luma part (Y output), and chroma decoder outputs (R-Y, B-Y outputs).
2. External R,G,B inputs from SCART (converted internally in Y,U,V), with also the possibility to input YUV signals from a DVD player, (YUV specification is Y=0.7 V PP , U= 0.7 V PP , V = 0.7V PP for 100% color bar).
3. Internal R,G,B inputs (for OSD and Teletext display)

The main functions of the video part are:

- Y,U,V inputs with integrated clamp loop, allowing a DC link with YUV outputs,
- External RGB inputs (RGB to YUV conversion), or direct YUV inputs,
- Y,U,V switches,
- Contrast, saturation, brightness controls,
- YUV to RGB matrix,
- OSD RGB input stages (with contrast control),
- RGB switches,
- APR function,
- DC adjustment of red and green channels,
- Drive adjustments (R, G, B gain),
- Digital automatic cut-off loop control,
- Manual cut-off capability with I2C adjustments,
- Half tone, oversize blanking, external insertion detection, blue screen,
- Blanking control and RGB output stages.

2.8 -Controller

The ST92195 is the micro-controller, which is required for a color TV receiver. ST92195D1 is the version with one page Teletext and ST92195D7 is the one with 7 page Teletext. The IC has the supply voltages of 5 V and they are mounted in PSDIP package with 56 pins.

□-Controller has the following features

- Display of the program number, channel number, TV Standard, analogue values, sleep timer, parental control and mute is done by OSD
- Single LED for standby and on mode indication
- System configuration with service mode
- 3 level logic output for SECAM and Tuner band switching

3. TUNER

Either a PLL or a VST tuner is used as a tuner.
UV1316 (VHF/UHF) is used as a PLL tuner. For only PALM/N, NTSC M applications UV 1336 is used as the PLL tuner. UV 1315 (VHF/UHF) is used as a VST Tuner.

Channel coverage of UV1316:

BAND	OFF-AIR CHANNELS		CABLE CHANNELS	
	CHANNELS	FREQUENCY RANGE (MHz)	CHANNELS	FREQUENCY RANGE (MHz)
Low Band	E2 to C	48.25 to 82.25 (1)	S01 to S08	69.25 to 154.25
Mid Band	E5 to E12	175.25 to 224.25	S09 to S38	161.25 to 439.25
High Band	E21 to E69	471.25 to 855.25 (2)	S39 to S41	447.25 to 463.25

(1). Enough margin is available to tune down to 45.25 MHz.
(2). Enough margin is available to tune up to 863.25 MHz.

Noise	Typical	Max.	**Gain**	Min.	Typical	Max.
Low band	: 5dB	9dB	All channels	: 38dB	44dB	52dB
Mid band	: 5dB	9dB	Gain Taper (of-air channels)	:		8dB
High band	: 6dB	9dB				

Channel Coverage UV1336:

BAND	CHANNELS	FREQUENCY RANGE (MHz)
Low Band	2 to D	55.25 to 139.25
Mid Band	E to PP	145.25 to 391.25
High Band	QQQ to 69	397.25 to 801.25

Noise is typically 6dB for all channels. **Gain** is minimum 38dB and maximum 50dB for all channels.

Channel Coverage of UV1315:

BAND	OFF-AIR CHANNELS		CABLE CHANNELS	
	CHANNELS	FREQUENCY RANGE (MHz)	CHANNELS	FREQUENCY RANGE (MHz)
Low Band	E2 to C	48.25 to 82.25 (1)	S01 to S08	69.25 to 168.25
Mid Band	E5 to E12	175.25 to 224.25	S11 to S39	231.25 to 447.25
High Band	E21 to E69	471.25 to 855.25 (2)	S40 to S41	455.25 to 463.25

(1). Enough margin is available to tune down to 45.25 MHz.
(2). Enough margin is available to tune up to 863.25 MHz.

Noise	Typ.	Max.	**Gain**	Min.	Typ.	Max.
Low band	6dB	9dB	All Channels	38dB	44dB	50dB
Mid band	6dB	10dB	Gain Taper			8dB
High band	6dB	11dB	(off-air channels)			

4. DIGITAL TV SOUND PROCESSOR MSP34X0

The MSP 34x0D is designed to perform demodulation of FM or AM-Mono TV sound. Alternatively, two-carrier FM systems according to the German or Korean terrestrial specs or the satellite specs can be processed with the MSP 34x0D. Digital demodulation and decoding of NICAM-coded TV stereo sound, is done only by the MSP 3410. The MSP 34x0D offers a powerful feature to calculate the carrier field strength which can be used for automatic standard detection (terrestrial) and search algorithms (satellite).

5. SOUND OUTPUT STAGE TDA7266L/TDA7266

TDA7266L is used as the AF output amplifier for mono applications. It is supplied by +12VDC coming from a separate winding in the SMPS transformer. An output power of 5.5W (THD=0.5%) can be delivered into an 8ohm load.
TDA7266 is used as the AF output amplifier for stereo applications. It is supplied by +12VDC coming from a separate winding in the SMPS transformer. An output power of 2*5.5W (THD=0.5%) can be delivered into an 8ohm load.

6. VERTICAL OUTPUT STAGE WITH TDA8174A

The TDA8174A is a power amplifier circuit for use in 90° and 110° colour deflection systems for 25 to 200 Hz field frequencies, and for 4 : 3 and 16 : 9 picture tubes.

7. VIDEO OUTPUT AMPLIFIER STV5112

The STV5112 consists of three monolithic video output amplifiers. The amplifier can be seen as an operational amplifier with negative feedback. The advantage of negative feedback is that the amplifier characteristics do not play an important role up to certain frequencies. The internal flash diodes protect the amplifiers against flash over in the picture tube.
The only protections required at the cathode outputs are a flash resistor and a spark gap.
Furthermore, the device has a high voltage power supply (VDD) and a low voltage one (VCC).

8. POWER SUPPLY (SMPS)

The DC voltages required at various parts of the chassis are provided by an SMPS transformer controlled by the IC MC44608 which is designed for driving, controlling and protecting switching transistor of SMPS. The transformer produces 115V for FBT input, ±14V for audio output IC, S+3.3, S+5V and 8V for ST92195.

9. POWER FACTOR CORRECTION

Passive components are used for the solution of power factor correction.

10. SERIAL ACCESS CMOS 8K EEPROM 24C08

The 24C08 is a 8Kbit electrically erasable programmable memory (EEPROM), organized as 4 blocks of 256*08 bits.The memory is compatible with the I²C standard, two wire serial interface which uses a bi-directional data bus and serial clock.

11. CLASS AB STEREO HEADPHONE DRIVER TDA1308

The TDA1308 is an integrated class AB stereo headphone driver contained in a DIP8 plastic package

12. SAW FILTERS

Saw filter type :		**Model:**
G1975M	**:**	PAL B/G MONO
K2966M	**:**	PAL SECAM B/G/D/K/I MONO
J1981	**:**	PAL-I MONO
K2958M	**:**	PAL-SECAM B/G-D/K (38) MONO
K2962M	**:**	PAL-SECAM B/G/D/K/I/L/L' MONO
L9653M	**:**	SECAM L/L' AM MONO (AUDIO IF)
G3967M	**:**	PAL-SECAM B/G STEREO (VIDEO IF)
G9353M	**:**	PAL-SECAM B/G STEREO (AUDIO IF)
K3958M	**:**	PAL-SECAM B/G/D/K/I/L/L' STEREO (VIDEO IF)
K9356M	**:**	PAL-SECAM B/G/D/K/I STEREO (AUDIO IF)
K9656M	**:**	PAL-SECAM B/G/D/K/I/L/L' STEREO (AUDIO IF)
K3958M	**:**	PAL I NICAM (VIDEO IF)
K9356M	**:**	PAL I NICAM (AUDIO IF)
M1962M	**:**	PAL M/N NTSC M MONO
M3953M	**:**	PAL M/N NTSC M STEREO (VIDEO IF)
M9370M	**:**	PAL M/N NTSC M STEREO (AUDIO IF)

IC DESCRIPTIONS AND INTERNAL BLOCK DIAGRAM

- ST92195
- STV224X
- TUNER (UV1315, UV1316, UV1336)
- TDA7266L / TDA7266M
- TDA8174A
- STV5112
- MC44608
- MSP34X0D
- 24C08
- TDA1308
- SAW FILTERS

G1975M, K2966M, K2962M, L9653M, G3962M, G9353M, K3958M, K9356M, K9656M, K6263K, K9652M, M1962M, M3953M, M9370M

ST92195

The ST92195 is a member of the ST9+ family of micro-controllers, completely developed and produced by SGS-THOMSON Microelectronics using a proprietary n-well HCMOS process. The nucleus of the ST92195 is the advanced Core, which includes the Central Processing Unit (CPU), the ALU, the Register File and the interrupt controller. The Core has independent memory and register buses to add to the efficiency of the code. A set of on-chip peripherals form a complete sys-tem for TV set and VCR applications:

- Voltage Synthesis
- VPS/WSS Slicer
- Teletext Slicer
- Teletext Display RAM
- OSD

Additional peripherals include a watchdog timer, a serial peripheral interface (SPI), a 16-bit timer and an A/D converter.

MICROCONTROLLER PIN DESCRIPTION

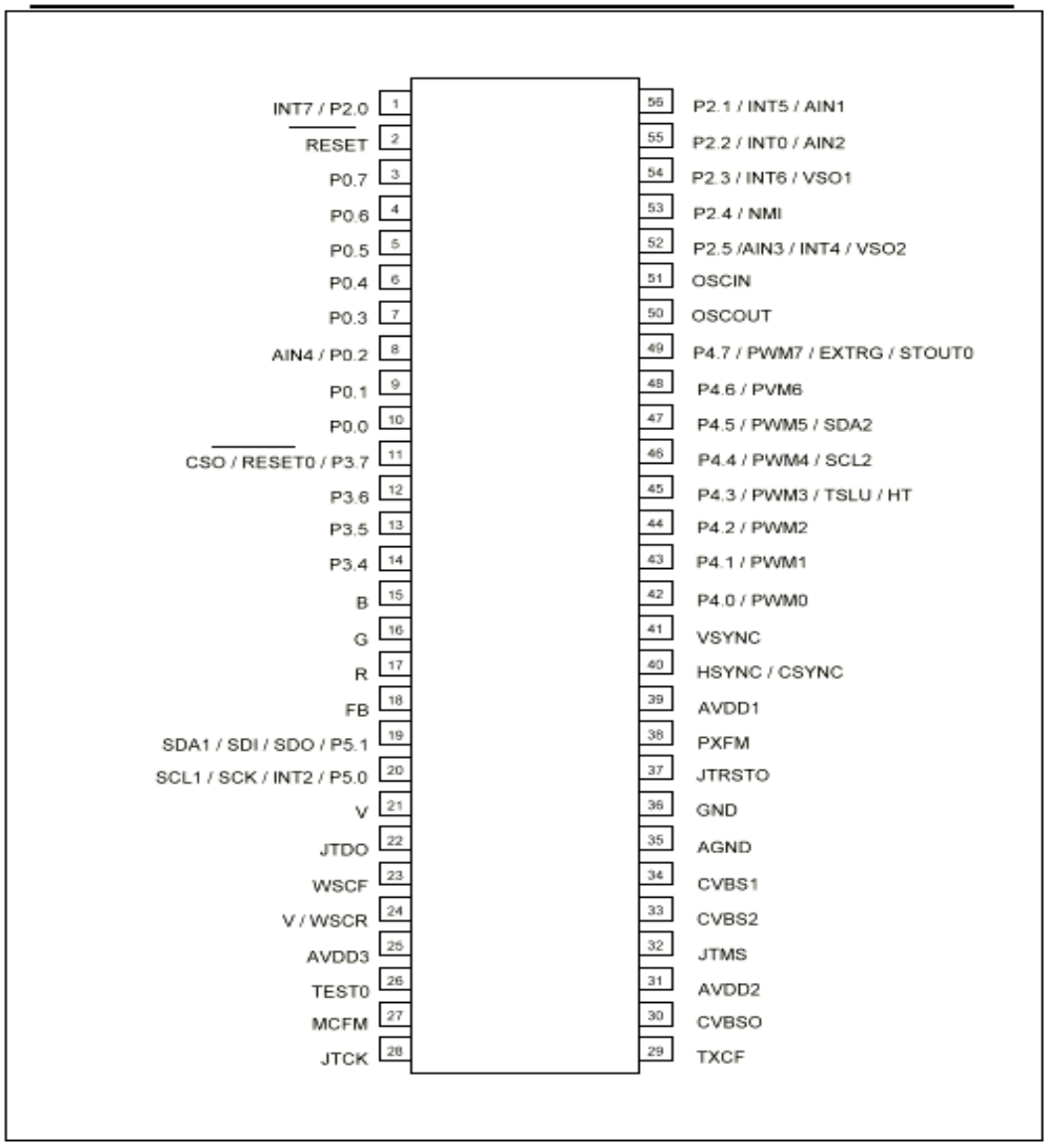

µ-CONTROLLER VERSİON TABLE

FEATURE	DESCRIPTION
NO TXT MONO	IC ST92195C 48K SW-A
NO TXT MONO	IC ST92185B SW-B
1 P MONO	IC ST92195C 48K SW-D
1 P MONO / STR	IC ST92195C 48K SW-E
7 P MONO/STR/WSS	IC ST92195C 64K SW-F
1 P MONO/STR/APS/WSS	IC ST92195C 64K SW-G

STV224X Video processor:

The STV2246/2247/2248 are fully bus controlled ICs for TV including PIF, SIF, luma, Chroma and deflection processing. Used with a vertical frame booster (TDA1771 or TDA8174 for 90° chassis, STV9306 for 110° chassis), they allow the design of multi-standard (BGDKIMNLL, PAL/ SECAM/NTSC) sets with very few external components and no manual adjustments.

PIN CONNECTIONS STV224X/8X (SDIP56)

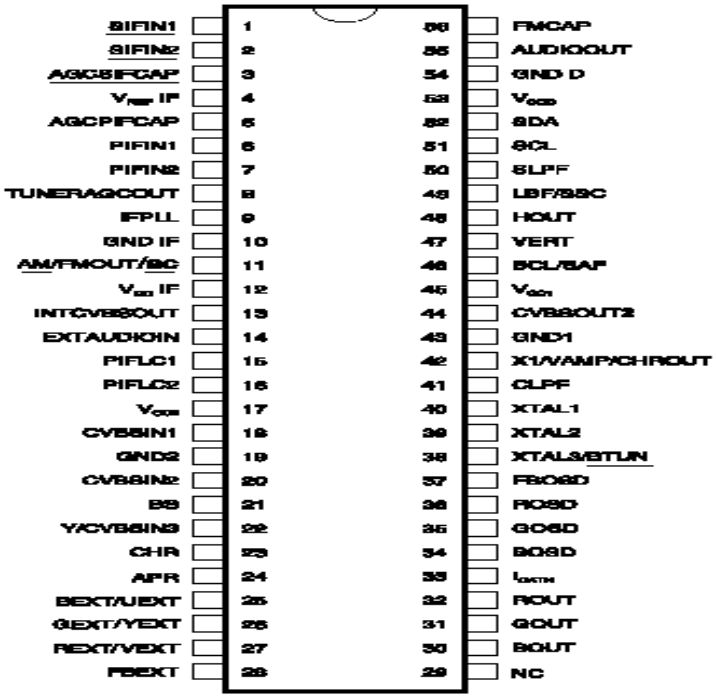

VIDEO PROCESSOR IC TABLE

BAND	PIN 3		PIN 3		PIN 3
VIDEO IC	AUDIO	STEREO	PAL	SECAM	NTSC
Low Band	OK	0 V	0 V	0 V	+5V
Mid Band	OK	0 V	OK	+5V	OK 0 V
High Band	-	+5V	OK	0 V	OK 0 V
STV 2248	OK	OK	OK	OK	OK

UV1315, UV1316, UV1336

General description of UV1315:

The UV1315 tuner belongs to the UV 1300 family of tuners, which are designed to meet a wide range of applications. It is a combined VHF, UHF tuner suitable for CCIR systems B/G, H, L, L', I and I'.

Features of UV1315:

- Member of the UV1300 family small sized UHF/VHF tuners
- Systems CCIR:B/G, H, L, L', I and I'; OIRT:D/K
- Voltage synthesized tuning (VST)
- Off-air channels, S-cable channels and Hyper-band
- Standardized mechanical dimensions and pinning

PINNING **PIN VALUE**

1. Gain control voltage (AGC) : 4.0V, Max:4.5V
2. Tuning voltage
3. High band switch : 5V, Min:4.75V, Max:5.5V
4. Mid band switch : 5V, Min:4.75V, Max:5.5V
5. Low band switch : 5V, Min:4.75V, Max:5.5V
6. Supply voltage : 5V, Min:4.75V, Max:5.5V
7. Not connected
8. Not connected
9. Not connected
10. Symmetrical IF output 1
11. Symmetrical IF output 2

Band switching table:

General description of UV1316:

The UV1316 tuner belongs to the UV 1300 family of tuners, which are designed to meet a wide range of applications. It is a combined VHF, UHF tuner suitable for CCIR systems B/G, H, L, L', I and I'.

Features of UV1316:

- Member of the UV1300 family small sized UHF/VHF tuners
- Systems CCIR: B/G, H, L, L', I and I'; OIRT: D/K
- Digitally controlled (PLL) tuning via I²C-bus
- Off-air channels, S-cable channels and Hyper-band
- World standardized mechanical dimensions and world standard pinning
- Complies to "CENELEC EN55020" and "EN55013"

PINNING		PIN VALUE
1. Gain control voltage (AGC)	:	4.0V, Max:4.5V
2. Tuning voltage		
3. I²C-bus address select	:	Max:5.5V
4. I²C-bus serial clock	:	Min:-0.3V, Max:5.5V
5. I²C-bus serial data	:	Min:-0.3V, Max:5.5V
6. Not connected		
7. PLL supply voltage	:	5.0V, Min:4.75V, Max:5.5V
8. ADC input		
9. Tuner supply voltage	:	33V, Min:30V, Max:35V
10. Symmetrical IF output 1		
11. Symmetrical IF output 2		

General description of UV1336:

UV1336 series is developed for reception of channels broadcast in accordance with the M, N standard.

Features of UV1336:

- Global standard pinning
- Integrated Mixer-Oscillator & PLL function
- Conforms to CISPR 13, FCC and DOC (Canada) regulations
- Low power consumption
- Both Phono connector and 'F' connector are available

PINNING		PIN VALUE
1. Gain control voltage	:	4.0V, Max:4.5V
2. Tuning voltage		
3. Address select		Max :5.5V
4. Serial cloc	:	Min :-0.3V, Max:5.5V
5. Serial data	:	Min :-0.3V, Max:5.5V
6. Not connected		
7. Supply voltage	:	5.0V, Min:4.75V, Max:5.5V
8. ADC input (optional)		
9. Tuning supply voltage	:	33V, Min:30V, Max:35V
10. Ground		
11. IF output		

TDA7266/TDA7266L

General Description of TDA7266L

The TDA7266L is a mono bridge amplifier specially designed for TV and Portable Radio applications.
Requires very few external components

WIDE SUPPLY VOLTAGE RANGE (3-18V)
MINIMUM EXTERNAL COMPONENTS
– NO SVR CAPACITOR
– NO BOOTSTRAP
– NO BOUCHEROT CELLS
– INTERNALLY FIXED GAIN
STAND-BY & MUTE FUNCTIONS
SHORT CIRCUIT PROTECTION
THERMAL OVERLOAD PROTECTION

PINNING

1. N.C
2. N.C.
3. MUTE
4. ST-BY
5. PW-GND
6. S-GND
7. IN
8. VCC
9. OUT+
10. OUT -

General Description of TDA7266

The TDA7266 is a 2x7 Watt dual power amplifier. It is used for sound amplification at stereo TV sets.
WIDE SUPPLY VOLTAGE RANGE (3-18V)
MINIMUM EXTERNAL COMPONENTS
– NOSWR CAPACITOR
– NOBOOTSTRAP
– NOBOUCHEROT CELLS
– INTERNALLY FIXED GAIN
STAND-BY & MUTE FUNCTIONS
SHORT CIRCUIT PROTECTION
THERMAL OVERLOAD PROTECTION

PINNING

1. OUT1+
2. OUT1 –
3. VCC
4. IN1
5. N.C.
6. MUTE
7. ST-BY
8. PW-GND
9. S-GND
10. N.C.
11. N.C.
12. IN2
13. VCC
14. OUT2 -
15. OUT2+

TDA8174AW

INDEPENDENT VERTICAL AMPLITUDE ADJUSTEMENT.
BUFFER STAGE.
POWER AMPLIFIER.
FLYBACKGENERATOR.
THERMALPROTECTION.
INTERNAL REFERENCE VOLTAGE DECOU-PLING

General Description:
TDA8174Aand TDA8174AWare a monolithic integrated circuits. It is a full performance and very efficient vertical deflection circuit intended for direct drive of a TV picture tube in Color and B & W television as well as in Monitor and Data displays.

PINNING

1. POWER OUTPUT
2. OUTPUT STAGE Vs
3. TRIGGER INPUT
4. HEIGHT ADJUSTMENT
5. VOLTAGE REF DECOUPLING
6. GROUND
7. RAMP GENERATOR
8. BUFFER OUTPUT
9. INVERTING INPUT
10. Vs
11. FLYBACK GENERATOR

STV5112

BANDWIDTH : 6MHz TYPICAL
SUPPLY VOLTAGE : 220V TYPICAL
RISE AND FALL TIME : 50ns TYPICAL
CRT CATHODE CURRENT OUTPUTS FOR
PARALLEL OR SEQUENTIAL CUT-OFF OR
DRIVE ADJUSTMENT
FLASHOVER PROTECTION
POWER DISSIPATION : 3.6W

General Description:
The STV5112 includes three video amplifiers designed with a high voltage bipolar/CMOS/DMOS technology (BCD). It drives directly the three cathodes and is protected against flashovers. Thanks to its three cathode current outputs, the STV5112 can be used with both parallel and sequential sampling applications.

PINNING

1. BLUE INPUT
2. VCC LOW VOLTAGE
3. GREEN INPUT
4. RED INPUT
5. VDD HIGH VOLTAGE
6. RED CATHODE CURRENT
7. RED OUTPUT
8. GROUND
9. RED FEEDBACK
10. GREEN OUTPUT
11. GREEN CATHODE CURRENT
12. GREEN FEEDBACK
13. BLUE OUTPUT
14. BLUE CATHODE
15. BLUE FEEDBACK

MC44608

General description:
The MC44608 is a high performance voltage-mode controller designed for off–line converters. This high voltage circuit that integrates the start–up current source and the oscillator capacitor, requires few external components while offering a high flexibility and reliability.
The device also features a very high efficiency stand–by management consisting of an effective Pulsed Mode operation. This technique enables the reduction of the stand–by power consumption to approximately 1W while delivering 300mW in a 150W SMPS.

- Integrated start–up current source
- Loss less off–line start–up
- Direct off–line operation
- Fast start–up

General Features
- Flexibility
- Duty cycle control
- On chip oscillator switching frequency 40, or 75kHz
- Secondary control with few external components

Protections
- Maximum duty cycle limitation
- Cycle by cycle current limitation
- Demagnetization (Zero current detection) protection
- “Over V CC protection” against open loop
- Programmable low inertia over voltage protection against open loop
- Internal thermal protection

GreenLine Controller
- Pulsed mode techniques for a very high efficiency low power mode
- Lossless startup
- Low dV/dT for low EMI radiations

PINNING	PIN VALUE
1. Demagnetization	Zero cross detection voltage : 50 mV typ.
2. I Sense	Over current protection voltage 1V typ.
3. Control Input	Min : 7.5V Max. : 18V
4. Ground	Iout $2A_{p-p}$ during scan $1.2A_{p-p}$ during flyback
5. Driver	Output resistor 8.5 Ohm sink 15 Ohm source typ.
6. Supply voltage	Max : 16V (Operating range 6.6V-13V)
7. No connection	
8. Line Voltage	Min : 50V Max : 500V

MSP34X0D

The MSP 34x0D is designed to perform demodulation of FM or AM-Mono TV sound. Two kinds of MSP's are used. MSP 3400D and MSP 3410D. The MSP 3400D is fully pin and software-compatible to the MSP 3410D, but is not able to decode NICAM. It is also compatible to the MSP 3400C.

General description:

Demodulator and NICAM Decoder Section

The MSP 34x0D is designed to perform demodulation of FM or AM-Mono TV sound. Alternatively, two-carrier FM systems according to the German or Korean terrestrial specs or the satellite specs can be processed with the MSP 34x0D. Digital demodulation and decoding of NICAM-coded TV stereo sound, is done only by the MSP 3410. The MSP 34x0D offers a powerful feature to calculate the carrier field strength, which can be used for automatic standard detection (terrestrial) and search algorithms (satellite).

General Features

- Two selectable analog inputs (TV and SAT-IF sources)
- Automatic Gain Control (AGC) for analog IF input. Input range: 0.10–3 V pp
- Integrated A/D converter for sound-IF inputs
- All demodulation and filtering is performed on chip and is individually programmable
- Easy realization of all digital NICAM standards (B/G, D/K, I & L) with MSP 3410G.
- FM demodulation of all terrestrial standards (incl. identification decoding)
- FM demodulation of all satellite standards
- No external filter hardware is required
- Only one crystal clock (18.432 MHz) is necessary
- FM carrier level calculation for automatic search algorithms and carrier mute function

DSP Section (Audio Base band Processing)

- Flexible selection of audio sources to be processed
- Two digital input and one output interface via I 2 S bus for external DSP processors, featuring surround sound, ADR etc.
- Digital interface to process ADR (ASTRA Digital Radio) together with DRP 3510A
- Performance of all de-emphasis systems including adaptive Wegener Panda 1 without external components or controlling
- Digitally performed FM identification decoding and de-matrixing
- Digital base-band processing: volume, bass, treble, 5-band equalizer, loudness, pseudo-stereo, and base-width enlargement
- Simple controlling of volume, bass, treble, equalizer etc.

Analog Section

- four selectable analog pairs of audio base-band inputs (= four SCART inputs) input level : = < 2 V RMS, input impedance : >= 25 kW
- one analog mono input (i.e. AM sound): input level : = < 2 V RMS , input impedance : > = 15 kW
- two high-quality A/D converters, S/N-Ratio : > = 85 dB
- 20 Hz to 20 kHz bandwidth for SCART-to-SCART copy facilities

24CO8

General description:

The 24C16 is a 8Kbit electrically erasable programmable memory (EEPROM), organized as 4 blocks of 256 * 08 bits. The memory operates with a power supply value as low as 2.5V.

Features:

- Minimum 1 million ERASE/WRITE cycles with over 10 years data retention
- Single supply voltage:4.5 to 5.5V
- Two wire serial interface, fully I²C-bus compatible
- Byte and Multi-byte write (up to 8 bytes)
- Page write (up to 16 bytes)
- Byte, random and sequential read modes
- Self timed programming cycle

PINNING	PIN VALUE
1. Write protect enable	: 0V
2. Not connected	: 0V
3. Chip enable input	: 0V
4. Ground	: 0V
5. Serial data address input/output	: Input LOW voltage : Min : -0.3V, Max : 0.3*Vcc
	: Input HIGH voltage : Min : 0.7*Vcc, Max : Vcc+1
6. Serial clock	: Input LOW voltage : Min : -0.3V, Max : 0.3*Vcc
	: Input HIGH voltage : Min : 0.7*Vcc, Max : Vcc+1
7. Multibyte/Page write mode	: Input LOW voltage : Min : -0.3V, Max : 0.5V
	: Input HIGH voltage : Min : Vcc-0.5, Max : Vcc+1
8. Supply voltage	: Min :2.5V, Max : 5.5V

TDA1308

Features:

- Wide temperature range
- Excellent power supply ripple rejection
- Low power consumption
- Short-circuit resistant
- High performance
- high signal-to-noise ratio
- low distortion

PINNING	PIN VALUE
1. Output A (Voltage swing)	: Min : 0.75V, Max : 4.25V
2. Inverting input A	: Vo(clip) : Min : 1400mVrms
3. Non-inverting input A	: 2.5V
4. Ground	: 0V
5. Non-inverting input B	: 2.5V
6. Inverting input B	: Vo(clip) : Min : 1400mVrms
7. Output B (Voltage swing)	: Min : 0.75V, Max : 4.25V
8. Positive supply	: 5V, Min : 3.0V, Max : 7.0V

Saw filter's list:

		VIDEO	AUDIO
MONO	PAL BG	G1975M	
	PS BG DK	K2966M	
	PAL I I'	J1981	
	PS BG DK K' I I'	K2966M	
	PS BG DK K' L L'	K2962M	L9653

		VIDEO	AUDIO
STR	PAL BG	G3963M	G9353M
	PAL I I'	K3958M	K9356
	PS BG DK K' I I'	K3958M	K9356
	PS BG DK K' L L'	K3958M	K9656

PINNING

1. Input
2. Input-ground
3. Chip carrier-ground
4. Output
5. Output

K9656M, L9653M

PINNING

1. Input
2. Switching Input
3. Chip carrier-ground
4. Output
5. Output

CIRCUIT DESCIRIPTION

POWER SUPPLY

The ZX series of receivers incorporate a Motorola switch mode power supply using a MC 44608 regulator controller IC. The circuit provides power to the receiver in both standby and. normal operation modes.

START UP

The switch on the mains supply is fed through the mains filter network TR801, the surge limiter resistor *R828,*the bridge rectifier diodes *D811/13/37/38,* and reservoir capacitor producing approx. 320 volts D.C to feed the switching MOSFET Q801 via the primary winding of TR802 pins 6 and 7.

Start up resistor R801 feeds from a 500V coming from the mains through the adder diodes D809, D890 to pin 8 of IC800, the IC uses 9mA current source and connects it internally to VCC at pin6 allowing a rapid charge enough for start up. ThenIC800 responds with the oscillator starting to oscillate at a 40khz frequency fixed by the IC manufacturer.

The IC then produces, pulse width modulation pulses, at this frequency on pin 5 to drive the base of the switching FET Q801, that will then switch current on and off through the primary of TR802, which will in turn provides voltages in the secondary windings. The secondary winding voltages being proportional to the length of time that Q801 is turned on in each cycle. The voltage produced between pins 4 and 3 of TR802 is rectified by D804 developing aprox. 12 volts on C810, which takes over from the start up resistor to supply pin 8 of IC800.

The Demag pin at pin1 offers 3 different functions: Zero voltage crossing detection (50mV), 24mA current detection and 120mA current detection. The 24mA level is used to detect the secondary reconfiguration status and the 120mA level to detect an Over Voltage status called Quick OVP.

The VCC at pin6 operates between 6,6V and 13V in normal operation, when this voltage exceeds 15V then the IC output is disabled.

VOLTAGE REGULATION

After initial start up the secondary voltages of TR802 are established. These voltages then need to be regulated to the required levels. In a switch mode power supply such as this, it is the ON time of the switching FET Q801 that determines the output voltages produced. To provide regulation of the supply there is a feedback loop via an adjustable zener IC118 and an OPTO- coupler connected to pin3 of IC800. The reference voltage of IC118 is set to 2,5V to supply a B+ voltage of 115V. Any fluctuation at this pin will cause IC800 to compensate it either by increasing or decreasing the voltage at the secondary outputs.

VOLTAGE PROTECTION

The MC44608 offers two OVP functions:

1- A fixed function that detects when V CC is higher than 15.4V

2- A programmable function that uses the demag pin. The current flowing into the demag pin is mirrored and compared to the reference current Iovp (120mA). -Thus this OVP is quicker than normal number one as it directly sense the change in current rather than waiting for a specific voltage value, and is called QOVP. In both cases, once an OVP condition is detected, the output is latched off until a new circuit START–UP.

3- A software controlled function acts on pin52 of IC501. This pin monitors feedback from both 8V and 5V via D512, then compares these to a reference value Vref pre-set by the hardware through resistors R545, R546, R548. In normal mode operation 1.2V < Vref < 2.4V. Any voltage outside this window will cause the micro controller to force the TV to stand by mode by lowering the standby port. Refer to standby mode.

CURRENT PROTECTION

To monitor the current drawn by the receiver the source of Q801 is returned to the bridge rectifier through a low value resistor R807. All the current drawn by the receiver will flow through that resistor each time Q801 conducts, this will produce a voltage across the resistors proportional to the current drawn by the receiver. This voltage is fed to pin 2 of IC800 via R806.When the receiver is working normally the voltage across R807 is only a fraction of a volt and is not large enough to have any effect on IC800. Under fault conditions, if the receiver draws excessive current the voltage across *R807* will rise. This voltage is monitored by the current sense input pin2.

This Current Sense pin senses the voltage developed on the series resistor R806 inserted in the source of the power MOSFET. When I sense reaches 1V, the Driver output (pin 5) is disabled. This is known as the Over Current Protection function. A 200mA current source is flowing out of the pin 3 during the start–up phase and during the switching phase in case of the Pulsed Mode of operation. A resistor can be inserted between the sense resistor and the pin 3, thus a programmable peak current detection can be performed during the SMPS stand–by mode.

SAFETY PRECAUTIONS

Remember that all the primary side components of the power supply shown to the left of TR8O2 on the diagram are live to earth. It is recommended that a mains isolation transformer is used when servicing the receiver.

Many of the components in the power supply are safety critical. (R828, R809) is a surge-limiting resistor, limiting the surge through the degauss coils when the reservoir capacitor is empty. These are marked with an exclamation mark in a triangle on the circuit diagram. These components MUST be replaced only with parts of identical value and safety characteristics. For reliability, it is recommended that only genuine parts are used for service replacements.

Always check the main supply voltage feeding the line output stage after replacing parts in the power supply or line output circuit. The correct voltage is important for safety and reliability, the correct voltage should be 115 V ±2 V.

When servicing note that the reservoir capacitor C809 can remain charged to high voltage for some time after the a.c. supply is removed. This can result in a shock hazard or damage to components whilst working on the receiver.
Do not try to test Q801 base emitter junction if C809 is charged, your meter will turn on the transistor which will discharge the capacitor resulting in a collector emitter short circuit. Do not discharge C809 quickly with a screwdriver etc. The very high current produced can damage the internal connections of the capacitor causing failure at a later date. Remember when checking voltages to use a return path on the same side of TR802 for the Voltmeter earth to obtain the correct readings.

STANDBY OPERATION

As mentioned earlier the Start–up Management of MC44608 is as follows:

The Vi pin 8 of IC800 is directly connected to the HV DC rail Vin. This high voltage current source is internally connected to the VCC pin and thus issued to charge the VCC capacitor. The V CC capacitor charge period corresponds to the Start–up phase. When the V CC voltage reaches 13V, the high voltage 9mA current source is disabled and the device starts working. The device enters into the switching phase.

To help increase the application safety against high voltage spike on pin8 a small wattage 1k_series resistor is inserted between the Vin rail and pin 8. After this start-up the IC can distinguish between the different modes of operation using the following technique:

MODE TRANSITION

The LW latch is the memory of the working status at the end of every switching sequence. Two different cases must be considered for the logic at the termination of the SWITCHING PHASE:

1. No Over Current was observed
2. An Over Current was observed

These two cases correspond to the two signals “NOC” in case of “No Over Current” and “OC” in case of Over Current. The effective working status at the end of the ON time memorized in LW corresponds to Q=1 for no over current, and Q=0 for over current.

To enter the standby mode secondary side is reconfigured using D889 loop, this starts with the microprocessor ‘s pin 47becomes high; as the standby port becomes high Q503 conducts and Q802 becomes off then D889 conducts and the high voltage output value becomes lower than the NORMAL mode regulated value. The shunt regulator IC118 is fully OFF. In the SMPS stand–by mode all the SMPS outputs are lowered except for the low voltage output that supply the wake–up circuit located at the isolated side of the power supply. In that mode the secondary regulation is performed by the Zener diode (D801) connected in parallel to the TL431. The secondary reconfiguration status can be detected on the SMPS primary side by measuring the voltage level at pin4 of TR802.

In the SMPS stand–by mode the 3 distinct phases are:

The SWITCHING PHASE: Similar to the Overload mode. The current sense clamping level is reduced. When VCC crosses the current sense section, the C.S. clamping level depends on the power to be delivered to the load during the SMPS stand–by mode. Every switching sequence ON/OFF is terminated by an OC as long as the secondary Zener diode voltage has not been reached. When the Zener voltage is reached the ON cycle is terminated by a true PWM action. The proper SWITCHING PHASE termination must correspond to a NOC condition. The LW latch stores this NOC status.
The LATCHED OFF PHASE: The MODE latch is set.
The START–UP PHASE is similar to the Overload Mode. The MODE latch remains in its set status (Q=1).
The SWITCHING PHASE: The Stand–by signal is validated and the 200uA is sourced out of the Current Sense pin 2.

SMPS SWITCH OFF

When the mains is switched OFF, so long as the electrolytic bulk capacitor provides energy to the SMPS the controller remains in the switching phase. Then the peak current reaches its maximum peak value, the switching frequency decreases and all the secondary voltages are reduced. The V CC voltage is also reduced. When VCC is less than 6,5V, the SMPS stops working.

MICROPROCESSOR IC501

IC 501 controls all the functions of the receiver operated by the remote control and the front panel customer controls. It produces the on screen graphics, operates tuning, customers controls and engineering controls, and also incorporates all of the Teletext functions. It also controls the video processor, the audio processor, and the tuner. The circuits just mentioned are controlled via the I²C bus. Also IC501 controls the video source switching, vertical position adjustment and the vertical linearity adjustment via its ports.

An external 8K EEprom is used by the micro. The EEprom comes fully programmed. The main clock oscillator is 4.0 MHz crystal X501 on pins 50 and 51. Reset is provided on pin 2 via Q504. On switching on pin 2 becomes high and the controller gets reset which stays valid till a low signal comes on that pin.

CONTROLS

Command information from the infra red remote controller is fed through the sensor IC502 to pin 1 of the microprocessor. Operation of the customer front panel keys is detected by pin 8 that is an ADC (analogue to digital converter). Pressing a switch will connect the 5V to the ground through a particular resistor that determines the value of the voltage on pin8 at that instant. This obtained value is comprehended by the micro and the corresponding operation is performed. Refer to the following table:

BUTTON	Theoririkal voltage	Resistance
P +	3.0 V	R502
P -	4.0 V	R503
V +	2.0 V	R504
V -	1.5 V	R506
MENU	1.0 V	R505

IC501automatically switches from Tv mode to AV1, AV2 by detecting the signal from pin29 or pin8 at the scart connector, through its 56, 55 pins. The picture mode is determined according to the following table:

Direct voltage	Voltage Incrementing	Picture mode
0 to 2.0 V	0 to 4.5 V	TV mode
2.0 to 7.0 V	4.5 to 9.5 V	16:9 mode
7.0 to 12 V	9.5 to 12 V	4:3 mode

TUNING

All the tuning functions are carried by the microprocessor IC501. Three tuning modes are available for this chassis, VST tuning, PLL tuning, and frequency tuning. In all of these both manual and automatic modes are possible. If Auto Tuning Mode is selected the receiver tunes Band 1, Band2, and UHF, putting into memory the channel, signal strength (signal's amplitude for VST and video indent for PLL), and tuning data of each TV station found. The memories are then stored automatically to put the channels into frequency order from lowest frequency to the highest one. In APS (Auto-Programming-System) TV sets the channels are stored according to the standard tables provided for each country. In VST mode IC501 generates the tuning control voltage as pulse width modulation output at pin54. This pulse operates a voltage switch Q502 converting the 0 to 5V pulse into a 0 to 33V pulses that are then integrated and smoothed by R550/553/563 and C535/538/544 to give a steady DC voltage of value between 0 to 33V for tuning control on pin 2 of the tuner. IC501 also controls the band switching of the tuner by pins 12/13/14 via Q507, Q506 and Q505 for the different bands UHF, Band1, and Band2.

In both PLL and frequency tuning modes the tuning process is controlled by IC501 via the I²C BUS. In PLL mode a table for all the channels available is set according to the standards and the micro controller uses these values to set the central frequency of the required channel. This mode is quicker that VST mode.

Frequency tuning is a new feature to this chassis, it takes the advantages of both VST and PLL tuning. As in PLL mode the tuning process is controlled via I²C bus, however the channels' are not predefined in the software by a table on the contrary these are scanned as in VST but here the frequency changes and not the voltage. In frequency tuning the micro generates I²C signals to account for a 1Mhz frequency increment on the tuner and then scan all the frequency either manually or automatically. This method is faster than the VST and more precise than PLL tunings.

Automatic fine tuning (AFT) correction voltage is done internally inside IC403 and fed to the microprocessor via I²C BUS. This is used by the software to modify the mark space output at pin 54 producing the tuning voltage. The AFT voltage is also used in tuning mode to identify the presence of a signal whilst tuning. This is used in auto tuning mode to determine the optimum frequency setting for the channel. Tuner AGC voltage from pin 8 of IC403 is taken directly to the tuner.

VOLUME CONTROL

A pulse width modulation output is developed inside the processor and is fed to the audio processor in stereo sets and to the video processor in mono sets via the I²C BUS to control the volume. The physical control on the front panel works in the same way.

TELETEXT

The microprocessor IC501 performs all of the teletext functions internally. The Composite Blanking video and Sync signal (CBVS) is input to pin 33 of the micro from pin 29 of IC403. When text is selected the text graphics are output as R.G.B signals on pins 15/16/17 of the micro and fed to pins 34/35/36 of IC403. At the same time pin 18 of the micro goes high taking pin 37 of IC403 high, blanking the picture and selecting text R.G.B. input. output, IC701.
Note. mixed mode is available and fast text with 8 page memory .

A.V SWITCHING

A.V. input can be selected from the remote control or by applying 6 to12 volts from pin 8 of the scart connector, This takes pin 55/56 of the micro high (5 volts). When external A.V input is requested pin 55 or Pin 56 of the micro goes high. This is then transmitted via the I²C bus to IC403, selecting external signals from the scart connector.

SERVICE MODE

The AK30 chassis incorporates an electronic service mode operated by the micro. Full details are given on pages 20 to 25 of the service manual. The mode is entered by a combination of button presses (4-7-2-5), whilst the Main menu is on the screen. You can select any adjustment and change it.

A list of adjustments is available such as OSD position, IF central frequency adjustment, AGC, vertical linearity, size, position, horizontal position, R.G.B gains, APR, tuner settings for PLL tuners, and five options for the Tv set features configurations.

HOTEL MODE

Hotel mode is a feature in the software in this receiver. However we do supply a special remote control which has access to the menu's denied.

This means that the Tv can be tuned in, and set up with the original remote control, then the special remote is left with the receiver.

EEPROM INITIALISATION

If the E²PROM IC500 is replaced it will come fully programmed and therefore it is not necessary to initialise the new device. In some circumstances the E²PROM may become corrupted in use i.e. static discharge or lightning strike. If this happens, it is advised that the E²PROM is replaced.

OFF AIR SIGNAL PATH

TUNER

A UV1315 voltage controlled tuner is used on the AK30 chassis, operating from a 5volt supply, line (pin6). A 0 to 33 volt rail is used for tuning (pin 2), controlled by the microprocessor IC501. The AFT pin on the tuner is not used, instead the Automatic Fine Tuning is achieved by modifying the tuning control line. This is done by software in IC501. The gain of the tuner can be altered by the AGC control voltage fed in to pin1.

The tuner produces a balanced output on pins 10,11. Neither side is connected to earth. This is fed via a surface wave filter Z402 to the IF input of IC403 (pins 6 and 7).

IC403 incorporate the IF amplification, AFT , AGC, video and sound detectors as well as AV switching. The IC requires both 5 and 8 V tuned circuit for these functions, L401, L402, L403, and L406.

VIDEO PATH

The detected video signal is output from pins 13 of IC403, to sound traps Z403/404. The video is taken from the other side via the appropriate filter to Pin 18 of IC403. (1.2 p to p) Video to the scart connectors is taken after R458 to Pin 19 of the scart connector. The CVBS_TXT output Pin29 output is fed to IC501 Pin 34 (for teletext). The video signal is sometimes labelled CVBS on the circuit diagram. This stands for Composite Video Blanking & Sync.

The composite signal is input Pin 13 (Video input) of IC403. This IC carries out all of the luma/Chroma processing internally and also provides the customer control functions of brightness, contrast, sharpness and saturation. IC403 is I²C bus controlled and incorporates auto greyscale circuitry and internal luma/chroma delay lines. The resulting R.G.B drive is output on pins 30,31 and 32. The R.G.B passes via connector PL405 to the CRT base PCB. Here the R.G.B signal is amplified by IC901 to provide drive for the cathodes of the CRT. IC901 produces a feedback signal which is fed to IC403 (pin 33) for blanking and auto grayscale correction.

SOUND PATH

The demodulated mono sound is taken from pin 55 of IC403 directly to the sound output stage IC401 Pin 7. The output signal from IC401 is Volume controlled achieved within IC403 using the I²C bus line from IC501. To limit the volume at the specified out put the A_out pin 55 is fed to IC 401 through a voltage divider R455 and R454. Muting of the output stage is provided from Pin 46 of IC501 to pin3 of IC401/6 of IC301.

IN the stereo model the IF from PINS 10 & 11 of the tuner passes through Z401 and the output signal goes through pins 1&2 of IC403. The output QSS signal from IC 403 is taken from pin 11 and sent to audio processor IC700. The left channel is output on PIN 29 and the right channel output is on PIN 28.Then to IC301 after passing through a voltage divider R454/R455 for the right channel and R463/R464 for the left channel.

IC403 handles also the AM modulated signals in L/L' systems at pins 1&2.

AV INPUT SIGNAL PATH

Video and Sound

IC403 has three CVBS inputs at pins 18,20 and 22.The composite video signal of AV1 is taken from pin 41 of the scart connector to pin20 of IC403. The mono sound signal is taken from pins 2 and 6 of the scart sockets to the switching transistors Q101. The transistor switch the audio depending on the source, and is then fed to pin14 of IC403. The CVBS coming from AV2 or AV3 is taken from pin20 of scart connector, from the JK1 for BAV or JK4 for FAV. Then these signals are switched by transistors Q141, Q142 depending on the source by the microprocessor's pins 5,6,7. The resultant signal is given to pin 22 of IC403.

Scart two supports also SVHS signals and then the chroma comes from pin 15 of connector PL101 directly to pin 23 of IC403, whilst the luma uses the same path as the CVBS of AV2.

When AV input is selected pin 5,6,7 of the microprocessor IC50 I is taken high, this switches the IC403 to external input mode via I²C BUS. This connects the video inputs on pins 20 or 22 to IC403 and the audio input on pin 14 to the audio out on pin 55 (via the internal volume control circuit) The signal paths are then as for off air.

The chassis can detect the video signals on scart 1 and 2 using pin 8 switching voltages at pins 56 and 55 of IC501.

R.G.B

The R.G.B signals from pins 7,11 and 15 of the scart connector (PL101) are fed to the R.G.B input pins (25,26,27) of IC403. R.G.B operation can be enabled by either taking pin 16 of the scart connector high, this high is fed to Pin 28 of IC403, or via the I²C bus the microprocessor sets IC403 to forced R.G.B mode in which the video processor generates its own fast blank signal. This puts the IC into external R.G.B mode and selects the inputs on pins 25,26 and 27, overriding the video input on pin 20/22.
Note: when using R.G.B input the contrast, brightness and colour controls will still operate.

LINE CIRCUIT

Line and frame drive are generated by IC403. The sync pulses are separated from the incoming video signal at pin 18/20/22 and used to control the internal circuitry of the IC. Line drive is produced by counting down the external 4.43 MHz crystal at pin 40 to15.625 kHz locked to the incoming sync. This drive is output on pin 48 and feeds directly to the line drive transistor Q601. Note. That the output of IC403 Pin 48 is an open-collector and requires a pull up resistor, if the pin is open circuited for test no waveform will be seen. Q601 collector feeds the line output transistor Q603.
The line output stage is conventional with a transformer containing a split diode winding for EHT generation.
Fifth harmonic tuning is achieved by capacitor C618/619.

FIELD OUTPUT VERTICAL SHIFT

A fly-back pulse is taken from pin 1 of the FBT transformer. This is required by IC403 (Pin 49) for burst / sync gating, and RGB line blanking. The ver_sync signal is output from the pin47 and fed to Pin41 of IC501. The H_sync pulse is taken from pin 1 of the FBT and fed to the micro at pin 40.These two signals are required by the micro for graphics timing and also for text.
IC403 generates a vertical pulse signal VER_OUT and V_AMP that are fed to IC600 (the vertical stage IC). IC600 is supplied by a 26V DC via diode D610.It generates its own ramp signal and based on the V_AMP & VER_OUT signals it produces the vertical deflection signals that are fed to connector PL601. Vertical linearity adjustment is controlled by Q604 which is driven by the PWM output of IC501 at pin 49. Vertical position adjustment is conducted by Q606 derived by the VER_OUT signal. Switching Q606 will change the DC voltage on VOUT_2 pin which will either lower or higher the picture. A DC level is supplied at VOUT_2 via D614 to stabilise the picture and make its position changeable.

B.C.L CIRCUIT (BEAM CURRENT LIMITER)

Beam current limiting is employed to protect the circuitry in the receiver, the CRT and to prevent excessive X Ray radiation in fault conditions. The current drawn by the CRT is monitored by the current drawn through the winding of the fly-back transformer that produces the EHT for the CRT anode. The end of the winding (Pin 10) is returned to IC403 Pins 46, the beam current drawn by the CRT passes through Q603 and develops a voltage on the collector proportional to the current (V=IxR). The voltage on the collector will vary depending on the beam current being drawn reducing the brightness and contrast of the picture. If the voltage is sufficiently negative (indicating very high excess beam current) the output will be reduced, reducing the picture brightness and contrast.

AK30 CHASSIS MANUAL ADJUSTMENT PROCEDURE

In order to enter service menu, first enter the main menu and then press the digits 4, 7, 2 and 5 respectively. To select adjust parameters, use ù or ü buttons. To change the selected parameter, use ÷ or ÿ buttons. Selected parameter will be highlighted.

Entire service menu parameters of AK30 CHASSIS are listed below. For some of parameters the default values are given on the same table.

REGISTER	PARAMETER	NOTE (NUMBERS ARE DEFAULT VALUES FOR CONCERNED PARAMETER)
OSD	OSD Horizontal Position	ADJUST HORIZONTAL POSITION FOR OSD
IF1	IF Coarse Adjust	5
IF2	IF Fine Adjust	63
IF3	IF Coarse Adjust for L-Prime	5
IF4	IF Fine Adjust for L-Prime	63
AGC	Automatic Gain Control	63
VLIN	Vertical Linearity	ADJUST VERTICAL LINEARITY
VS1A	Vertical Size for 50 Hz / 4:3	ADJUST VERTICAL SIZE FOR 4:3 MODE (50 HZ)
VS1B	Vertical Size for 50 Hz / 16:9	ADJUST VERTICAL SIZE FOR 16:9 MODE (50 HZ)
VP1	Vertical Position for 50 Hz	ADJUST VERTICAL POSITION (50 HZ)
HP1	Horizontal Position for 50 Hz	ADJUST HORIZONTAL POSITION (50 HZ)
VS2A	Vertical Size for 60 Hz / 4:3	ADJUST VERTICAL SIZE FOR 4:3 MODE (60 HZ)
VS2B	Vertical Size for 60 Hz / 16:9	ADJUST VERTICAL SIZE FOR 16:9 MODE (60 HZ)
VP2	Vertical Position for 60 Hz	ADJUST VERTICAL POSITION (60 HZ)
HP2	Horizontal Position for 60 Hz	ADJUST HORIZONTAL POSITION (60 HZ)
RGBH	RGB Horizontal Shift Offset	CVBS – RGB HORIZONTAL POSITION COMPENSATION
WR	White Point Adjust for RED	40
WG	White Point Adjust for GREEN	40
WB	White Point Adjust for BLUE	40
BR	Bias for RED	31
BG	Bias for GREEN	31
APR	APR Threshold	10
FMP1	FM Prescaler when AVL is OFF	9 (STEREO ONLY)
NIP1	NICAM Prescaler when AVL is OFF	20 (STEREO ONLY)
SCP1	SCART Prescaler when AVL is OFF	14 (STEREO ONLY)
FMP2	FM Prescaler when AVL is ON	18 (STEREO ONLY)
NIP2	NICAM Prescaler when AVL is ON	39 (STEREO ONLY)
SCP2	SCART Prescaler when AVL is ON	14 (STEREO ONLY)
F1H	High Byte of crossover frequency for VHF1-VHF3	MEANINGFUL FOR ONLY PLL TUNER (see tuner setting table)
F1L	Low Byte of crossover frequency for VHF1-VHF3	MEANINGFUL FOR ONLY PLL TUNER (see tuner setting table)
F2H	High Byte of crossover frequency for VHF3-UHF	MEANINGFUL FOR ONLY PLL TUNER (see tuner setting table)
F2L	Low Byte of crossover frequency for VHF3-UHF	MEANINGFUL FOR ONLY PLL TUNER (see tuner setting table)
BS1	Band Switch Byte for VHF1 Meaningful for only	MEANINGFUL FOR ONLY PLL TUNER (see tuner setting table)
BS2	Band Switch Byte for VHF3 Meaningful for only	MEANINGFUL FOR ONLY PLL TUNER (see tuner setting table)
BS3	Band Switch Byte for UHF Meaningful for only	MEANINGFUL FOR ONLY PLL TUNER (see tuner setting table)
CB	Control Byte Meaningful for only PLL Tuner	MEANINGFUL FOR ONLY PLL TUNER (see tuner setting table)
OP1	Option 1 (see the Option List)	PERIPHERAL OPTIONS (see option table)
OP2	Option 2 (see the Option List)	RECEPTION STANDART OPTIONS (see option table)
OP3	Option 3 (see the Option List)	VIDEO OPTIONS (see option table)
OP4	Option 4 (see the Option List)	TV FEATURE OPTIONS (see option table)
OP5	Option 5 (see the Option List)	CHANNEL TABLE OPTIONS (see option table)
TX1	Teletext Option 1 (see the Option List)	TELETEXT OPTIONS (see option table)

USING COLOUR BUTTONS ON SERVICE MENU

RED BUTTON (For Stereo models only): It switches the AVL to ON or OFF mode on service menu. AVL word is visible on service menu when AVL is on.

GREEN BUTTON : It switched the PICTURE MODE to 4:3 or 16:9 on service menu. It is usefull when it is necessary to adjust 16:9 picture mode vertical size.

YELLOW BUTTON : It switches to VERTICAL SCAN DISABLE mode. It is usefull to adjust screen voltage.

BLUE BUTTON : It is used to adjust AGC and IF automatically on service menu.

WHITE BALANCE ADJUSTMENT

The following three parameters are used to make white balance adjustment. To do this, use a Colour Analyser. Using WR (White point adjust for RED), WG (White point adjust for GREEN), WB (White point adjust for BLUE) parameters, insert the + sign in the square which is in the middle of the screen.
The suggested values for these parameters are given on the table above.

AGC ADJUSTMENT

In order to do AGC adjustment, enter a **60dBmV** RF signal level from channel C-12 (224.25 MHz)
Select AGC parameter from service menu. Press BLUE (INSTALL) button from remote controller. The adjustment will be done automatically by software. See the AGC indicator on service menu, it must be 1. Check that picture is normal at 90dBmV signal level.

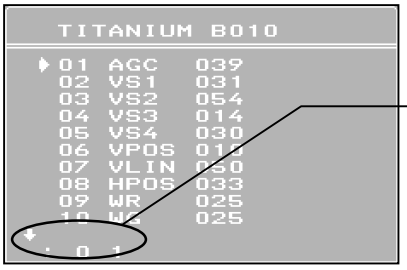

:	1	1
IF INDICATOR	AGC INDICATOR	NONE

IF NEGATIVE ADJUSTMENT (WITHOUT L' SYSTEMS)

Set the video pattern to a **PAL colour bar** pattern with frequency **38.9 MHz**. Apply this IF signal to PIN-10 and PIN-11 of tuner. Press PROG-1 and after that BLUE (INSTALL)button from remote controller. Select the standart as **BG** or **I**. (if BG is not available) Enter service menu. Select **IF1** parameter from service menu and press BLUE (INSTALL) button from remote controller. IF adjustment will be done automatically by software. See the IF indicator on service menu, it must be like on FIGURE-1 shown above.

IF POSITIVE ADJUSTMENT (WITH L' SYSTEMS)

Set the video pattern to a **SECAM-L colour bar** pattern with frequency **33.9 MHz**. Apply this IF signal to PIN-10 and PIN-11 of tuner. Press PROG-1 and after that BLUE (INSTALL)button from remote controller. Select the BAND VHF-1 (S1 – S4 for PLL tuners) and standart as **L'**. Enter service menu. Select **IF1** parameter from service menu and press BLUE (INSTALL) button from remote controller. IF adjustment will be done automatically by software. See the IF indicator on service menu, it must be like on FIGURE-1 shown above.

OSD HORIZONTAL POSITION ADJUSTMENT

Select OSD parameter on service menu. Adjust the horizontal position of OSD to the middle of screen, by using the reference bar on bottom of service menu.

TELETEXT BRIGHTNESS ADJUSTMENT

Set the TV set to a channel with TeleText. Enter service menu. Press TEXT button from remote controller. Adjust BRIGHTNESS parameter to value **39** by using left-right buttons from remote controller. Press TV button and MENU button from remote controller respectively. Adjustment is done.

	Vertical Linearty (VLIN) Enter a PAL B/G circle test pattern via RF. Change VLIN till you see circle as round as possible.
60 Hz ADJUSTMENTS	**Vertical Size (VS1A)** Enter a PAL B/G circle test pattern via RF. Change VS1A (Vertical Size) till horizontal black lines on both the upper and lower part of the test pattern become very close to the upper and lower horizontal sides of picture tube and nearly about to disappear. Check and readjust Vertical Size item if the adjustment becomes improper after some other geometric adjustments are done.
	Vertical Size (VS1B) Enter a PAL B/G circle test pattern via RF. Enter service menu and press GREEN (PICTURE) button from remote controller to switch to 16:9 picture mode on service menu. Change VS1B (Vertical Size) till the picture becomes 16:9 format. Check and eadjust Vertical Size item if the adjustment becomes improper after some other geometric adjustments are done.
	Vertical Position (VP1) Enter a PAL B/G circle test pattern via RF. Change Vertical Position till the test pattern is vertically centred. Horizontal line at the centre pattern is in equal distance both to upper and lower side of the picture tube. Check and readjust Vertical Position item if the adjustment becomes improper after some other geometric adjustments are done.
	Horizontal Position (HP1) Enter a PAL B/G circle test pattern via RF. Change Horizontal Position till the picture is horizontally centred. Check and readjust Horizontal Position item if the adjustment becomes improper after some other geometric adjustments are done.
60 Hz ADJUSTMENTS	**Vertical Size (VS2A)** Enter a NTSC-M circle test pattern via RF or video inputs. Change Vertical Size till the checkered parts of test pattern on both of upper and lower side dissappear. Check and readjust Vertical Size item if the adjustment becomes improper after some other geometric adjustments are done.
	Vertical Size (VS2B) Enter a NTSC-M circle test pattern via RF or video inputs. Enter service menu and press GREEN (PICTURE) button from remote controller to switch to 16:9 picture mode on service menu. Change Vertical Size till the picture becomes 16:9 format. Check and readjust Vertical Size item if the adjustment becomes improper after some other geometric adjustments are done.
	Vertical Position (VP2) Enter a NTSC-M circle test pattern via RF or video inputs. Change Vertical Position till the test pattern is vertically centred. Horizontal line at the centre pattern is in equal distance both to upper and lower side of the picture tube. Check and readjust Vertical Position item if the adjustment becomes improper after some other geometric adjustments are done.
	Horizontal Position (HP2) Enter a NTSC-M circle test pattern via RF or video inputs. Change Horizontal Position till the picture is horizontally centred. Check and readjust Vertical Size item if the adjustment becomes improper after some other geometric adjustments are done.
	RGB MODE Horizontal Position (RGBH) Enter a RGB circle test pattern via video inputs. Force the TV to RGB mode by pressing AV button from remote controller. Change RGB Horizontal Position till the picture is horizontally cetred. Check and readjust RGBH item if the adjustment becomes improper after some other geometric adjustments are done.

50 Hz. 4:3 Geometry Adjustment

6

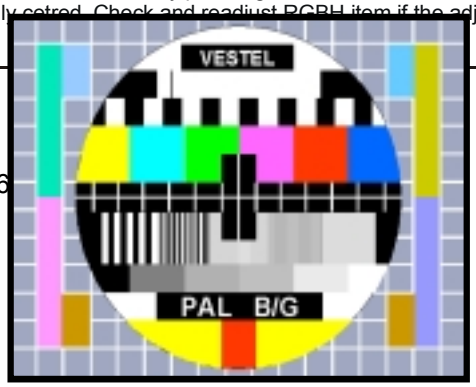

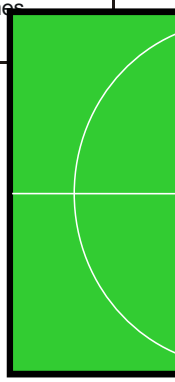

50 Hz. 16:9 Geometry Adjustment

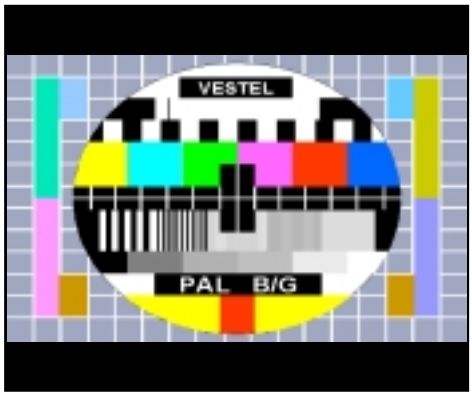

60 Hz. 16:9 Geometry Adjustment

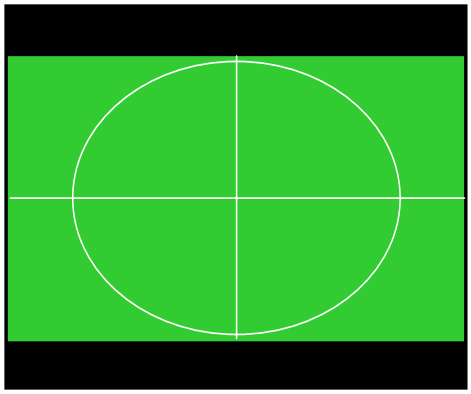

OPTION SETTINGS

Select concerned OPTION from service menu. To change a bit on selected option press the same number from remote controller. So this bit will be changed from 1 to 0 or from 0 to 1. If any option is selected on service menu you will see an indicator row shows you the bit numbers.

OP1 Peripheral Options		
		NOTE
BIT-7	NOT USED	0 default value
BIT-6	1, Display "AV-3" as "F-AV" 0, Display "AV-3" as "B-AV"	FAV or BAV IN selection option
BIT-5	1, Turn back TV mode after the last AV (with AV key) 0, Turn back first AV mode after the last AV	
BIT-4	1, SVHS is available in AV key stream 0, SVHS is NOT available in AV key stream	1, if AV-2 is selected
BIT-3	1, RGB is available in AV key stream 0, RGB is NOT available in AV key stream	1, if AV-1 is selected
BIT-2	1, AV-3 is available in AV key stream 0, AV-3 is NOT available in AV key stream	1, if FAV-IN or BAV-IN available
BIT-1	1, AV-2 is available in AV key stream 0, AV-2 is NOT available in AV key stream	
BIT-0	1, AV-1 is available in AV key stream 0, AV-1 is NOT available in AV key stream	

OP2 Reception Standard Options		
		NOTE
BIT-7	1, 3-button keyboard (V-, P+, V+) 0, 4/5 button keyboard (V-, V+, P-, P+, Menu)	0, default value
BIT-6	1, L/L' is available 0, L/L' is not available	
BIT-5	1, I is available 0, I is not available	
BIT-4	1, DK is available 0, DK is not available	
BIT-3	1, BG is available 0, BG is not available	
BIT-2	RESERVED (Keep as "0")	0, default value
BIT-1	RESERVED (Keep as "0")	0, default value
BIT-0	RESERVED (Keep as "0")	0, default value

OP3 Video Options		
		NOTE
BIT-7 BIT-6	Xtal Configuration 00, 1 Xtal PAL 4.43 01, 2 Xtal PAL/NTSC 4.43/3.58 10, 1 Xtal PAL/SEC/NTSC 4.43 11, 2 Xtal PAL/SEC/NTSC 4.43/3.58	
BIT-5	1, Enable Blue back when no signal in AV mode 0, blank back when no signal in AV mode	1, default value
BIT-4	1, White Insertion is ON 0, White Insertion is OFF	1, default value
BIT-3	1, Blue Background when no signal in TV mode 0, Disable Blue Background in TV mode	
BIT-2	1, Semi-transparent background for OSD 0, Solid Menu background for OSD	1, default value
BIT-1	1, Black Stretch is ON 0, Black Stretch is OFF	0, default value
BIT-0	1, APR is ON 0, APR is OFF	1, default value

OP4 TV Features		
		NOTE
BIT-7	1, Headphone is available (for STEREO models) 0, Headphone is not available	
BIT-6	1, Arabic/Persian is available in menu languages 0, Arabic/Persian is not available in menu languages	
BIT-5	1, Hebrew is available in menu languages 0, Hebrew is not available in menu languages	
BIT-4	1, Hotel Mode can be activated 0, Hotel Mode can not be activated	
BIT-3	1, No Signal Timer is enabled 0, No Signal Timer is disabled	5min. countdown and switch off when no signal
BIT-2	1, Frequency based search for PLL tuner 0, Channel table based search for PLL tuner no meaning for VST tuner	
BIT-1	1, 3-band tuning (VHF1, VHF3, UHF) 0, 1-band tuning (only UHF)	1, default value
BIT-0	1, Extra 200 msec blanking for VST 0, no extra blanking	1, default value

OP5 Channel Tables		
		NOTE
BIT-7	1, Extra 150 msec blanking more for VST 0, no extra blanking	1, default value
BIT-6	1, "Programme" item in AUTOSTORE menu is visible 0, "Programme" item in AUTOSTORE menu is invisible	1, default value
BIT-5	NOT USED	0, default value
BIT-4	1, French OS Channel Table is available 0, French OS Channel Table is not available	1, when L/L' is available
BIT-3	1, French Channel Table is available 0, French Channel Table is not available	1, when L/L' is available
BIT-2	1, England Channel Table is available 0, England Channel Table is not available	1, when I/I' is available
BIT-1	1, East Europe Channel Table is available 0, East Europe Channel Table is not available	1, when B/G is available
BIT-0	1, West Europe Channel Table is available 0, West Europe Channel Table is not available	1, when DK is available

TX1 Teletext Options		
		NOTE
BIT-7	NOT USED	0, default value
BIT-6	RESERVED (must be 0)	0, default value
BIT-5 BIT-4 BIT-3	5 4 3 Teletext Language Groups 000, Group 1 West (English,French,Swedish,Czech,German,Portuguese,Italien,Rumanian) 001, Group 2 West/East (Polish,French,Swedish,Czech,German,Serbian,Italien,Rumanian) 010, Group 3 West/Turkish (English,French,Swedish,Turkish,German,Portuguese,Italien,Rumanian) 011, Group 4 East/Cyrillic (English,Cyrillic,Swedish,Czech,German,Serbian,Lettish,Rumanian) 100, Group 5 Arabic (English,French,Swedish,Turkish,German,Hebrew,Italien,Arabic)	
BIT-2 BIT-1 BIT-0	2 1 0 Device type selection 000, EPROM M6 A 001, ROM H5 P 010, ROMLESS H5 P 011, EPROM M6 R 100, ROM M6 R 101, OSDEPROM M6 R 110, ROM M6 P 111, Read Auto Gain Table for the device from EEPROM	101, default value

TUNER SETTING

	VHF1-VHF3 Frq. (Mhz)	VHF3-UHF Frq.(Mhz)	AK30 SERVICE MENU ITEMS						
			F1H	F1L	F2H	F2L	BS1	BS2	BS
Philips UV1316S MK3	156,25 MHz	441,25 MHz	00001100	00110010	00011110	00000010	00000001	00000010	00000
Thomson CTT5020	114,25 MHz	401,25 MHz	00001001	10010010	00011011	10000010	00000011	00000110	10000
Samsung TECC2949PG28B	170,25 MHz	465,25 MHz	00001101	00010010	00011111	10000010	00000001	00000010	00000
Samsung TECC2949PG35B	170,25 MHz	449,25 MHz	00001101	00010010	00011110	10000010	00000001	00000010	00001
Alps TEDE9X226A	142,25 MHz	425,25 MHz	00001011	01010010	00011101	00000010	00000001	00000010	0000
Alps TEDE9-004A	149,25 MHz	424,25 MHz	00001011	11000010	00011100	11110010	00000001	00000010	0000

Explanations	
F1H	High byte of VHF1-VHF3 cross-over frequency
F1L	Low byte of VHF1-VHF3 cross-over frequency
F2H	High byte of VHF3-UHF cross-over frequency
F2L	Low byte of VHF3-UHF cross-over frequency
BS1	Band switching byte for VHF1
BS2	Band switching byte for VHF3
BS3	Band switching byte for UHF
CB	Control byte

NOTE : In case of an EEPROM defect you do not need an original MASTER EEPROM to run the TV again. Because of a spe
AK30 chassis works with an unprogrammed EEPROM. (Even without an EEPROM) In such kind of case service staff has to pu
the same type on the chassis and adjust all the options according to MANUAL ADJUSTMENT PROCEDURE !

JVC AK30 / MONO - SERVICE MENU

RELEASE DATE: **08.04.2002**

PREPARED BY: **BAHADIR ISCAN**

APPL.ENG.DEP.

ENTERING TO SERVICE MENU:

In order to enter service menu, first enter the main menu and then press the digits 4, 7, 2 and 5 respectively.
To select adjust parameters, use] or] buttons. To change the selected parameter, use]or ÿ buttons. Selected parameter will be highlighted.

Entire service menu parameters of AK30 CHASSIS are listed below. For some of parameters the default values are given on the same table.

USING COLOUR BUTTONS ON SERVICE MENU:

- RED BUTTON (For Stereo models only): It switches the AVL to ON or OFF mode on service menu. AVL word is visible on service menu when AVL is on.
- GREEN BUTTON : It switched the PICTURE MODE to 4:3 or 16:9 on service menu. It is useful when it is necessary to adjust 16:9 picture mode vertical size.
- YELLOW BUTTON : It switches to VERTICAL SCAN DISABLE mode. It is useful to adjust screen voltage.
- BLUE BUTTON : It is used to adjust AGC and IF automatically on service menu.

OSD:

Select OSD parameter on service menu. Adjust the horizontal position of OSD to the middle of screen, by using the reference bar on bottom of service menu.

Min. Value: 000
Max. Value: 127
Recommended Value: 082

IF Adjustments:

IF1:	**IF Coarse Adjustment**	004
IF2:	**IF Fine Adjustment**	065
IF3:	**IF Coarse Adjustment for L-prime**	004
IF4:	**IF Fine Adjustment for L-prime**	065

IF NEGATIVE ADJUSTMENT (WITHOUT L' SYSTEMS)
Set the video pattern to a PAL colour bar pattern with frequency 38.9 MHz. Apply this IF signal to PIN-10 and PIN-11 of tuner. Press PROG-1 and after that BLUE (INSTALL)button from remote controller. Select the standard as BG or I. (if BG is not available) Enter service menu. Select IF1 parameter from service menu and press BLUE (INSTALL) button from remote controller. IF adjustment will be done automatically by

software. See the IF indicator on service menu, it must be like on FIGURE-1 shown belove.

IF POSITIVE ADJUSTMENT (WITH L' SYSTEMS)
Set the video pattern to a SECAM-L colour bar pattern with frequency 33.9 MHz. Apply this IF signal to PIN-10 and PIN-11 of tuner. Press PROG-1 and after that BLUE (INSTALL)button from remote controller. Select the BAND VHF-1 (S1 – S4 for PLL tuners) and standard as L'. Enter service menu. Select IF1 parameter from service menu and press BLUE (INSTALL) button from remote controller. IF adjustment will be done automatically by software. See the IF indicator on service menu, it must be like on FIGURE-1 shown below.

AGC: Automatic Gain Control

In order to do AGC adjustment, enter a **60µdBV** RF signal level from channel C-12 (224.25 MHz) Select AGC parameter from service menu. Press BLUE (INSTALL) button from remote controller. The adjustment will be done automatically by software. See the AGC indicator on service menu, it must be 1. Check that picture is normal at 90dBµV signal level.

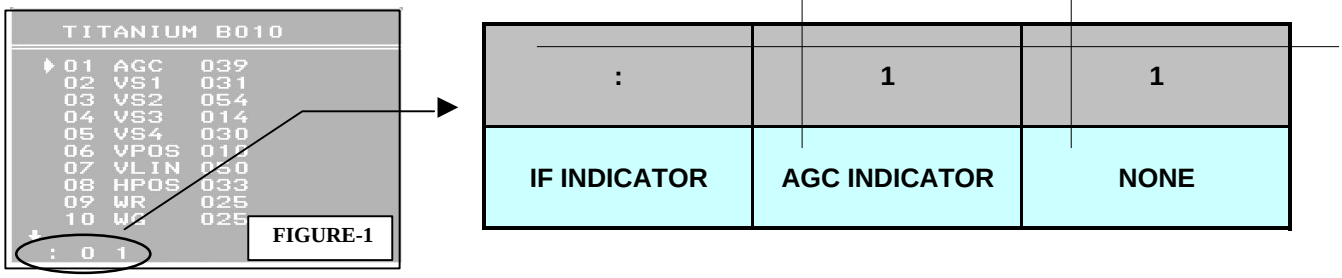

SCREEN ADJUSTMENT: (FBT Screen)

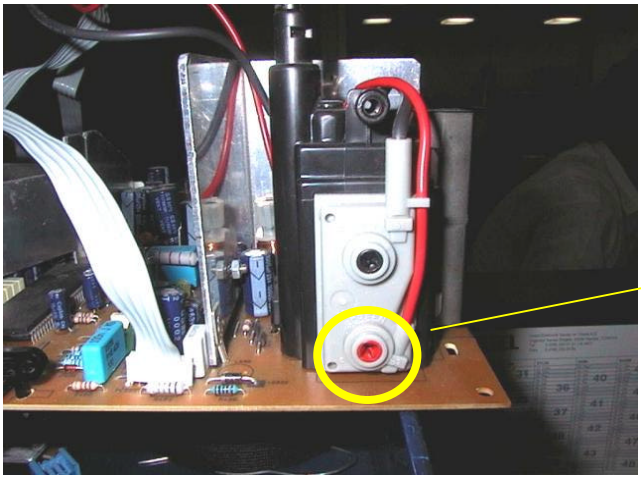

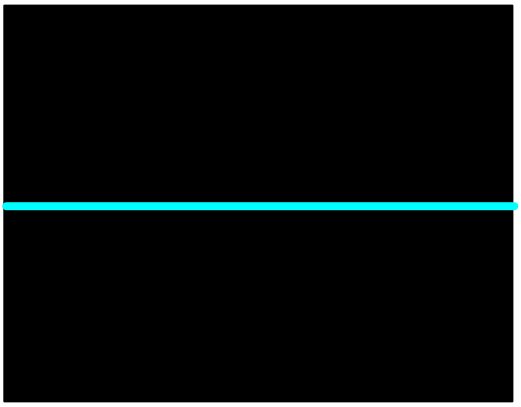

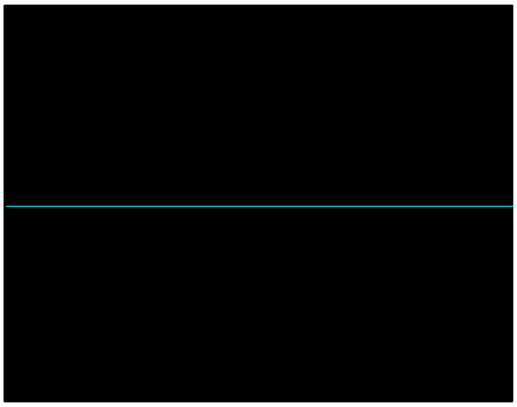

Enter service menu by pressing “MENU” and “4, 7, 2, 5” from remote controller. Then press yellow button to disable vertical scan. Adjust screen via screen pot. For a thin horizontal line. Press yellow button again to enable vertical scan. Press “TV” button to leave service menu.

VLIN: Vertical Linearity

Enter a PAL B/G circle test pattern via RF. Change VLIN till you see circle as round as possible.

Min. Value:	000
Max. Value:	063
Recommended Value:	045

VS1A: Vertical Size for 50 Hz / 4:3

Enter a PAL B/G circle test pattern via RF. Change VS1A (Vertical Size) until horizontal black lines on both the upper and lower part of the test pattern become very close to the upper and lower horizontal sides of picture tube and nearly about to disappear. Check and readjust Vertical Size item if the adjustment becomes improper after some other geometric adjustments are done.

Min. Value: 000
Max. Value: 063
Recommended Value: 030

VS1B: Vertical Size for 50 Hz / 16:9

Enter a PAL B/G circle test pattern via RF. Enter service menu and press GREEN (PICTURE) button from remote controller to switch to 16:9 picture mode on service menu. Change VS1B (Vertical Size) till the picture becomes 16:9 format. Check and readjust Vertical Size item if the adjustment becomes improper after some other geometric adjustments are done.

Min. Value: 000
Max. Value: 063
Recommended Value: 056

VP1: Vertical Position for 50 Hz

Enter a PAL B/G circle test pattern via RF. Change Vertical Position till the test pattern is vertically centered. Horizontal line at the center pattern is in equal distance both to upper and lower side of the picture tube. Check and readjust Vertical Position item if the adjustment becomes improper after some other geometric adjustments are done.

Min. Value: 000
Max. Value: 015
Recommended Value: 010

HP1: Horizontal Position for 50 Hz

Enter a PAL B/G circle test pattern via RF. Change Horizontal Position until the picture is horizontally centered. Check and readjust Horizontal Position item if the adjustment becomes improper after some other geometric adjustments are done.

Min. Value: 000
Max. Value: 063
Recommended Value: 035

VS2A: Vertical Size for 60 Hz / 4:3

Enter an NTSC-M circle test pattern via RF or video inputs. Change Vertical Size until the checkered parts of test pattern on both of upper and lower side disappear. Check and readjust Vertical Size item if the adjustment becomes improper after some other geometric adjustments are done.

Min. Value: 000
Max. Value: 063
Recommended Value: 013

VS2B: Vertical Size for 60 Hz / 16:9

Enter an NTSC-M circle test pattern via RF or video inputs. Enter service menu and press GREEN (PICTURE) button from remote controller to switch to 16:9 picture mode on service menu. Change Vertical Size until the picture becomes 16:9 format. Check and readjust Vertical Size item if the adjustment becomes improper after some other geometric adjustments are done.

Min. Value: 000
Max. Value: 063
Recommended Value: 038

VP2: Vertical Position for 60 Hz

Enter an NTSC-M circle test pattern via RF or video inputs. Change Vertical Position till the test pattern is vertically centered. Horizontal line at the center pattern is in equal distance both to upper and lower side of the picture tube. Check and readjust Vertical Position item if the adjustment becomes improper after some other geometric adjustments are done.

Min. Value: 000
Max. Value: 015
Recommended Value: 012

HP2: Horizontal Position for 60 Hz

Enter an NTSC-M circle test pattern via RF or video inputs. Change Horizontal Position till the picture is horizontally centered. Check and readjust Vertical Size item if the adjustment becomes improper after some other geometric adjustments are done.

Min. Value: 000
Max. Value: 063
Recommended Value: 030

RGBH: RGB Mode Horizontal Shift Offset

Enter a RGB circle test pattern via video inputs. Force the TV to RGB mode by pressing AV button from remote controller. Change RGB Horizontal Position till the picture is horizontally centered. Check and readjust RGBH item if the adjustment becomes improper after some other geometric adjustments are done.

Min. Value: 000
Max. Value: 063
Recommended Value: 007

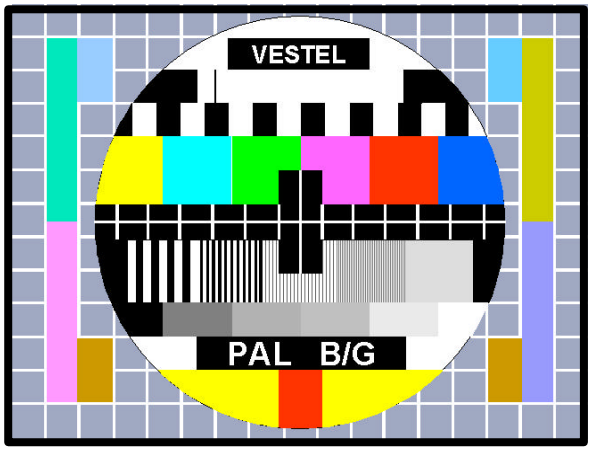

4:3 50Hz GEOMETRY ADJ.

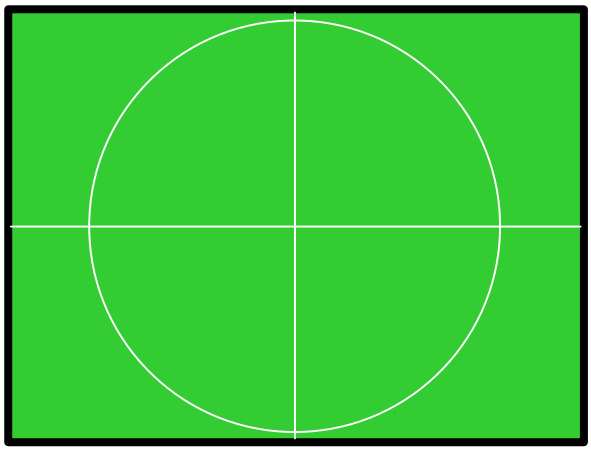

4:3 60Hz GEOMETRY ADJ.

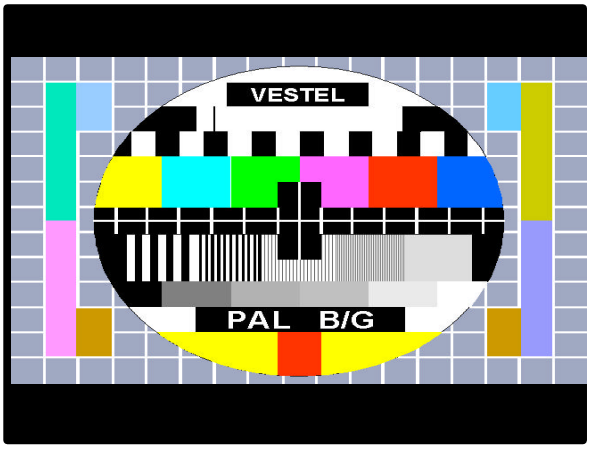

16:9 50Hz GEOMETRY ADJ.

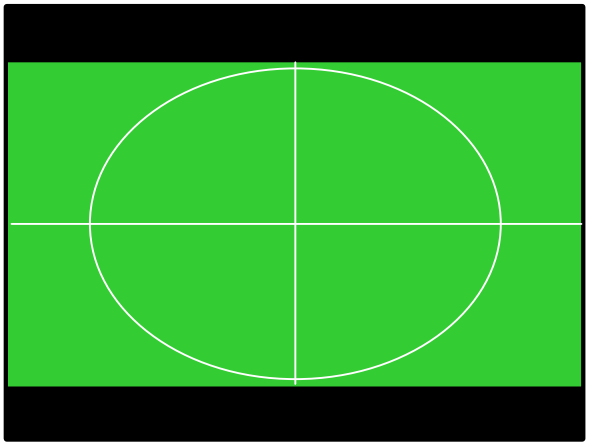

16:9 60Hz GEOMETRY ADJ.

WHITE BALANCE ADJUSTMENT

The following three parameters are used to make white balance adjustment. To do this, use a Colour Analyzer. Using WR (White point adjust for RED), WG (White point adjust for GREEN), WB (White point adjust for BLUE) parameters, insert the + sign in the square which is in the middle of the screen.

WR: White Point Adjustment for RED

Use this parameter to set the strength of RED in White.

Min. Value: 000
Max. Value: 063
JVC Default: 040

WG: White Point Adjustment for GREEN

Use this parameter to set the strength of GREEN in White.

Min. Value: 000
Max. Value: 063

JVC Default: 040

WB: White Point Adjustment for BLUE

Use this parameter to set the strength of BLUE in White.

Min. Value: 000
Max. Value: 063

JVC Default: 040

BR: Bias for RED

Use this parameter to set the strength of RED in BLACK.

Min. Value: 000
Max. Value: 063

JVC AV20&21BJ8: 030
JVC AV14BJ&BM8: 024

BG: Bias for GREEN

Use this parameter to set the strength of GREEN in BLACK.

Min. Value: 000

JVC AV20&21BJ8: 031
JVC AV14BJ&BM8: 035

APR: Automatic RGB Peak Regulation (APR) Threshold

The goal of the ***APR*** function ***(Automatic RGB peak regulation)*** is to compensate the spread of contrast between sources or programs by regulating the peak amplitude of RGB signals. This results in a picture with higher contrast whatever the input signal amplitude. Besides, APR increases the contrasts of pictures with low contrast and avoids the clipping at RGB output for pictures with high amplitude.

To enable APR, refer to OP3 in Option Bytes.

Min. Value: 000
Max. Value: 015

JVC Default: 010

The following default values are the factory settings of the corresponding items. Except Volume, all values are restored when STANDARD button is pushed during no menu is displayed. Volume is set to its default value only if the A.P.S. bit is set when the TV is turned on.

BRI: Brightness

JVC AV20&21BJ8: 037
JVC AV14BJ&BM8: 035

CON: Contrast

JVC AV20&21BJ8: 035
JVC AV14BJ&BM8: 050

COL: Colour

JVC AV20&21BJ8: 043
JVC AV14BJ&BM8: 047

SHA: Sharpness

JVC AV20&21BJ8: 06
JVC AV14BJ&BM8: 08

HUE: Hue

Default Value: 31

VOL: Volume

Default Value: 15

WR-R: White Point Adjustment for RED (RGB Mode)

Use this parameter to set the strength of RED in White for a RGB Pattern.

Default Value: Not determined by JVC yet.

WG-R: White Point Adjustment for GREEN (RGB Mode)

Use this parameter to set the strength of GREEN in White for a RGB Pattern.

Default Value: Not determined by JVC yet.

WB-R: White Point Adjustment for BLUE (RGB Mode)

Use this parameter to set the strength of BLUE in White for a RGB Pattern.

Default Value: Not determined by JVC yet.

FMP1: FM Prescaler when AVL is OFF (STEREO ONLY)

Min. Value: 000
Max. Value: 127
Recommended Value: 009

NIP1: NICAM Prescaler when AVL is OFF (STEREO ONLY)

Min. Value: 000
Max. Value: 127
Recommended Value: 020

SCP1: SCART Prescaler when AVL is OFF (STEREO ONLY)

Min. Value: 000
Max. Value: 127
Recommended Value: 013

FMP2: FM Prescaler when AVL is ON (STEREO ONLY)

Min. Value: 000
Max. Value: 127
Recommended Value: 013

NIP2: FM Prescaler when AVL is ON (STEREO ONLY)

Min. Value: 000
Max. Value: 127
Recommended Value: 016

SCP2: FM Prescaler when AVL is ON (STEREO ONLY)

Min. Value: 000
Max. Value: 127
Recommended Value: 013

Tuner Settings:

In the following table, the parameters for tuner settings and the setting values of Thomson CTF 5510 are given.

Parameter	Explanation	Thomson CTF5510
F1H	High byte of VHF1-VHF3 cross-over frequency	0000 1001
F1L	Low byte of VHF1-VHF3 cross-over frequency	1001 0010
F2H	High byte of VHF3-UHF cross-over frequency	0001 1011
F2L	Low byte of VHF3-UHF cross-over frequency	1000 0010
BS1	Band switching byte for VHF1	0000 0011
BS2	Band switching byte for VHF3	0000 0110
BS3	Band switching byte for UHF	1000 0101
CB	Control byte	1000 1110

Option Bytes:

OP1: Peripheral Options

b7: NOT USED

b6: 1, Display “AV-3” as “F-AV”
0, Display “AV-3” as “B-AV”

b5: 1, Turn back TV mode after the last AV (with AV key)
0, Turn back first AV mode after the last AV

b4: 1, AV-1 S is available in AV key stream
0, AV-1 S is NOT available in AV key stream

b3: 1, RGB is available in AV key stream
0, RGB is NOT available in AV key stream

b2: 1, AV-3 is available in AV key stream
0, AV-3 is NOT available in AV key stream

b1: 1, AV-2 is available in AV key stream
0, AV-2 is NOT available in AV key stream

b0: 1, AV-1 is available in AV key stream
0, AV-1 is NOT available in AV key stream

OP2: Reception Standard Options

b7: 1, 3-button keyboard (V-, P+, V+)
0, 4/5 button keyboard (V-, V+, P-, P+, Menu)

b6: 1, L/L’ is available
0, L/L’ is not available

b5: 1, I is available
0, I is not available

b4: 1, DK is available
0, DK is not available

b3: 1, BG is available
0, BG is not available

b2: 1, 3D PANORAMA is visible (STEREO ONLY)
0, DOLBY VIRTUAL is visible

b1: NOT USED

b0: 1, LOW POWER is available
0, LOW POWER is not available

When LOW POWER is available, low power consumption is provided during Stand-by.

OP3: Video Options

b7-6: Xtal Configuration
00, 1 Xtal PAL 4.43
01, 2 Xtal PAL/NTSC 4.43/3.58
10, 1 Xtal PAL/SEC/NTSC 4.43
11, 2 Xtal PAL/SEC/NTSC 4.43/3.58

b5: 1, Enable Blue back when no signal in AV modes
0, No blue back in AV modes

b4: 1, White Insertion is ON
0, White Insertion is OFF

White Insertion permits video IC to force a white picture during soft stop to discharge the tube at switching off. It prevents white flaming while switching off the TV.

b3: 1, Blue Background when no signal
0, Disable Blue Background

b2: 1, Semi-transparent background for menu
0, Solid Menu background for menu

b1: 1, Black Stretch is ON
0, Black Stretch is OFF

The **Black Stretch** function is used to increase the contrast for darker signals (lower than 50 IRE) when the overall picture is bright, and thus improve the display of the picture details. The amplitude of the stretch depends on the average picture content.

b0: 1, APR is ON
0, APR is OFF

OP4: TV Features

b7: NOT USED

b6: NOT USED

b5: 1, AK36 chassis
0, AK30 chassis

b4: 1, Hotel Mode can be activated
0, Hotel Mode cannot be activated

b3: 1, No Signal Timer is enabled
0, No Signal Timer is disabled

b2: For PLL Tuner
1, Frequency based search
0, Channel table based search
(No meaning for VST Tuner)

b1: NOT USED

b0: 1, Extra 200 msec blanking for VST
0, no-extra blanking

Extra 200-msec blanking is needed for VST tuners in order to prevent the color-delaying problem in SECAM.

OP5: Channel Tables

b7: 1, Extra 150 msec blanking more for VST (if OP4.b0 = 1, to SECAM color problem)
0, no-extra blanking

b6: NOT USED

b5: 1, Force both channel on even no carrier (carrier mute disable)
(for STEREO models)
0, Default value after reset

b4: NOT USED

b3: NOT USED

b2: NOT USED

b1: NOT USED

TX1: Teletext Options

b7: 1, Auto APS after Stand-By
0, no APS after Stand-By

In shipping condition, APS bit is set to1 and after the TV is turned on for the first time, it's automatically set to 0.

b6: RESERVED (must be 0)

b5: 1, Frequency item is VISIBLE in Install Menu and APS Menu
0, Frequency item is INVISIBLE in Install Menu and APS Menu

b4-3: Chassis Code

00, EP version
01, EE version
10, EN version
11, EJ version

Chassis Code is used when no country is selected in A.P.S menu, so the software automatically selects the sound standard depending on the chassis code.

b2-1-0: Device type selection

000, EPROM M6 A
001, ROM H5 P
010, ROMLESS H5 P
011, EPROM M6 R
100, ROM M6 R
101, OSDEPROM M6 R OTP
110, ROM M6 P MASK P SERIES
111, Read Auto Gain Table for the device from EEPROM MASK O SERIES

The default values of the option bytes are given in the following table:

	EN Version	EP Version	EE Version
OP1	0111 0101	0111 0101	0111 0101
OP2	0000 1001	0100 1001	0001 1001
OP3	0110 0111	1110 0111	1110 0111
OP4	0000 1001 (AV20&21BJ8) 0010 1001 (AV14BJ&BM8)	0000 1001 (AV20&21BJ8) 0010 1001 (AV14BJ&BM8)	0000 1001 (AV20&21BJ8) 0010 1001 (AV14BJ&BM8)
OP5	1000 0000	1000 0000	1000 0000
TX1	(1)001 0(101)	(1)000 0(101)	(1)000 1(101)