Applicable Country & Regions:

All Regions

Product Service Manual – Level 3

Service Manual for BenQ:
Projector/MS500, MX501
<9H.J5277.000, 9H.J5377.000>

Version: 00a
Date:2011/03/31

Notice:

For RO to input specific "Legal Requirement" in specific NS regarding to responsibility and liability statements.

Please check BenQ's eSupport web site, http://esupport.benq.com, to ensure that you have the most recent version of this manual.

First Edition (Mar 2011)
© Copyright BenQ Corporation 2007. All Right Reserved.

Schematics—Main board:

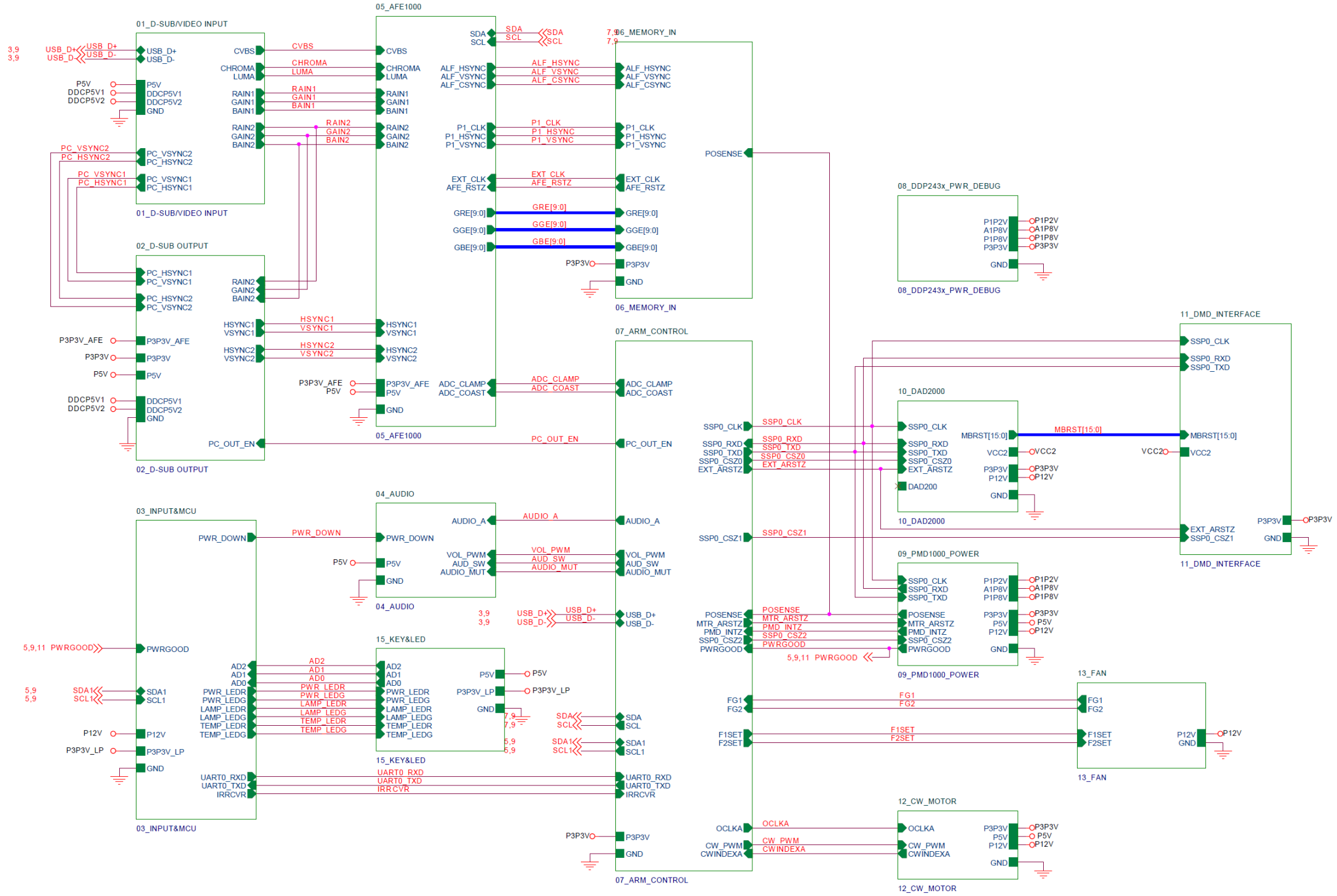

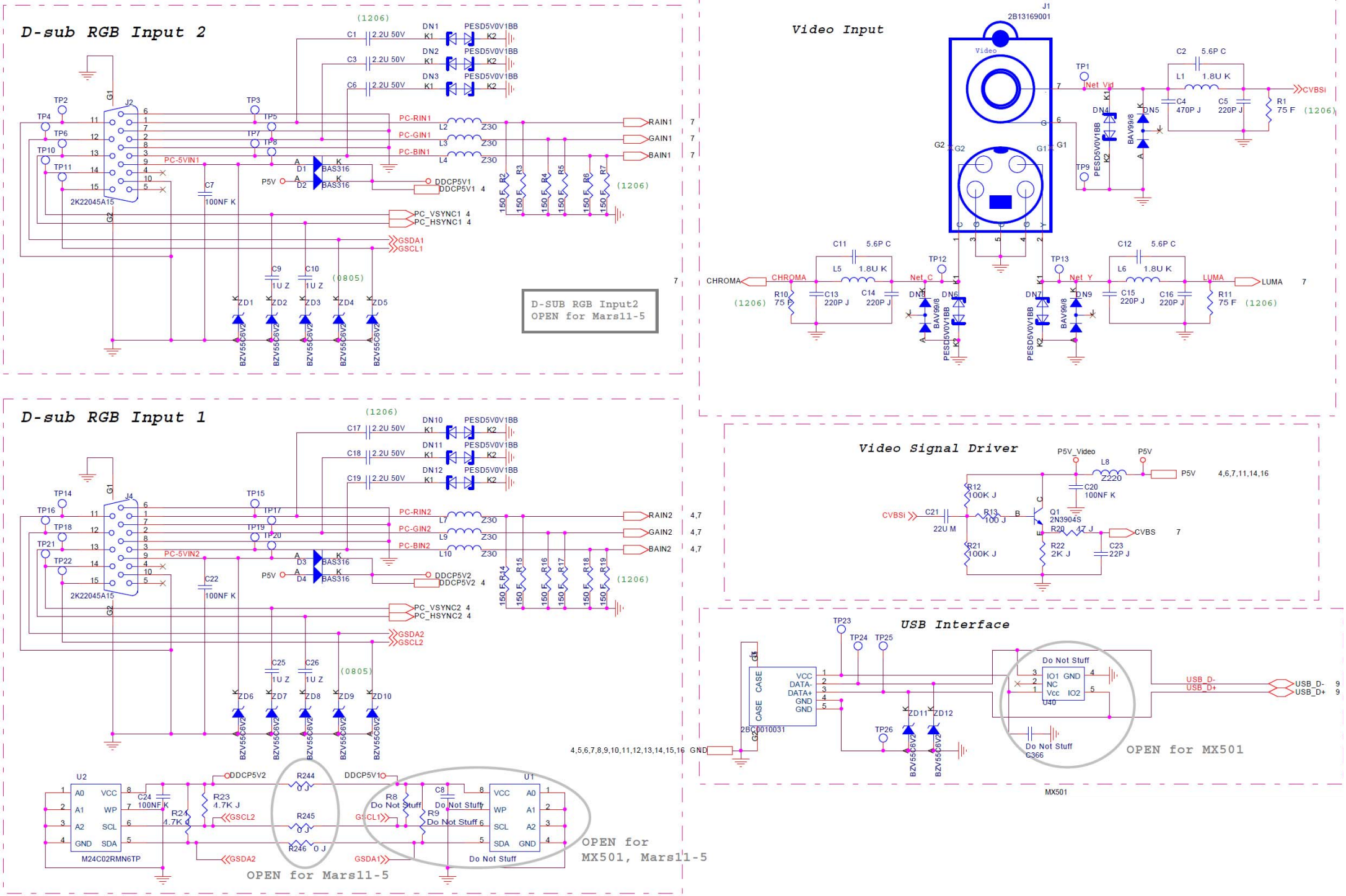
D-sub RGB Input 2
(1206)
DN1 PESD5V0V1BB
DN2 PESD5V0V1BB
DN3 PESD5V0V1BB
C1 2.2U 50V
C3 2.2U 50V
C6 2.2U 50V
J2
TP2
TP3
TP4
TP5
TP6
TP7
TP8
TP10
TP11
2K22045A15
PC-5VIN1
C7 100NF K
PC-RIN1
PC-GIN1
PC-BIN1
L2 Z30
L3 Z30
L4 Z30
RAIN1
GAIN1
BAIN1
P5V
D1 BAS316
D2 BAS316
DDCP5V1
R2 150 F
R3 150 F
R4 150 F
R5 150 F
R6 150 F
R7 150 F
(1206)
PC_VSYNC1
PC_HSYNC1
GSDA1
GSCL1
C9 1U Z
C10 1U Z
(0805)
ZD1 ZD2 ZD3 ZD4 ZD5
BZV55C6V2
D-SUB RGB Input2
OPEN for Mars11-5
Video Input
J1
2B13169001
Video
TP1
Net Vid
C2 5.6P C
L1 1.8U K
C4 470P J
C5 220P J
R1 75 F (1206)
CVBSI
DN4 DN5
BAV99/8
PESD5V0V1BB
TP9
C11 5.6P C
L5 1.8U K
TP12
Net C
CHROMA
R10 75 F (1206)
C13 220P J
C14 220P J
DN6 DN8
TP13
Net Y
C12 5.6P C
L6 1.8U K
LUMA
C15 220P J
C16 220P J
R11 75 F (1206)
DN7 DN9
D-sub RGB Input 1
(1206)
DN10 PESD5V0V1BB
DN11 PESD5V0V1BB
DN12 PESD5V0V1BB
C17 2.2U 50V
C18 2.2U 50V
C19 2.2U 50V
J4
TP14
TP15
TP16
TP17
TP18
TP19
TP20
TP21
TP22
2K22045A15
PC-5VIN2
C22 100NF K
PC-RIN2
PC-GIN2
PC-BIN2
L7 Z30
L9 Z30
L10 Z30
RAIN2
GAIN2
BAIN2
P5V
D3 BAS316
D4 BAS316
DDCP5V2
R14 150 F
R15 150 F
R16 150 F
R17 150 F
R18 150 F
R19 150 F
(1206)
PC_VSYNC2
PC_HSYNC2
GSDA2
GSCL2
C25 1U Z
C26 1U Z
(0805)
ZD6 ZD7 ZD8 ZD9 ZD10
BZV55C6V2
Video Signal Driver
P5V_Video
L8 Z220
P5V
C20 100NF K
CVBSI
C21 22U M
R12 100K J
R13 100 J
Q1 2N3904S
R20 47 J
CVBS
R21 100K J
R22 2K J
C23 22P J
USB Interface
TP23
TP24
TP25
TP26
J3
CASE
VCC
DATA-
DATA+
GND
2B20010031
ZD11 ZD12
BZV55C6V2
Do Not Stuff
IO1 GND
NC
Vcc IO2
U40
USB_D-
USB_D+
Do Not Stuff
C366
OPEN for MX501
MX501
U2
M24C02RMN6TP
C24 100NF K
R23 4.7K J
R24 4.7K J
DDCP5V2
R244 0 J
R245 0 J
R246 0 J
GSCL2
GSDA2
DDCP5V1
R8 Do Not Stuff
R9 Do Not Stuff
C8 Do Not Stuff
GSCL1
GSDA1
U1
Do Not Stuff
OPEN for Mars11-5
OPEN for MX501, Mars11-5
4,5,6,7,8,9,10,11,12,13,14,15,16 GND

H1,V1 Buffer

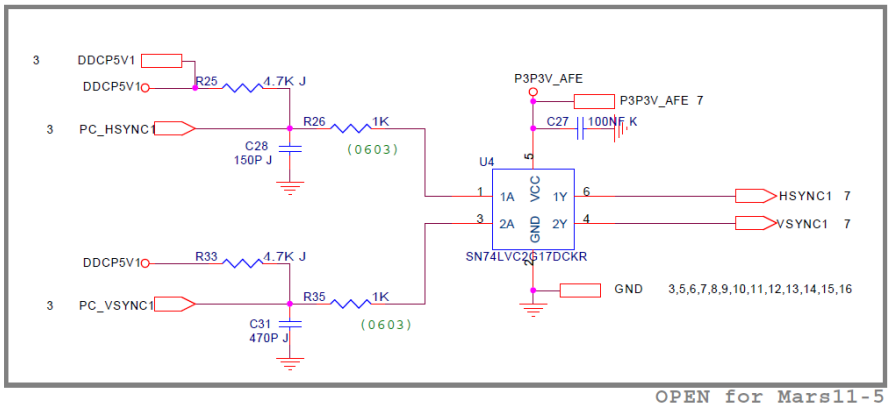

OPEN for Mars11-5

H2,V2 Buffer

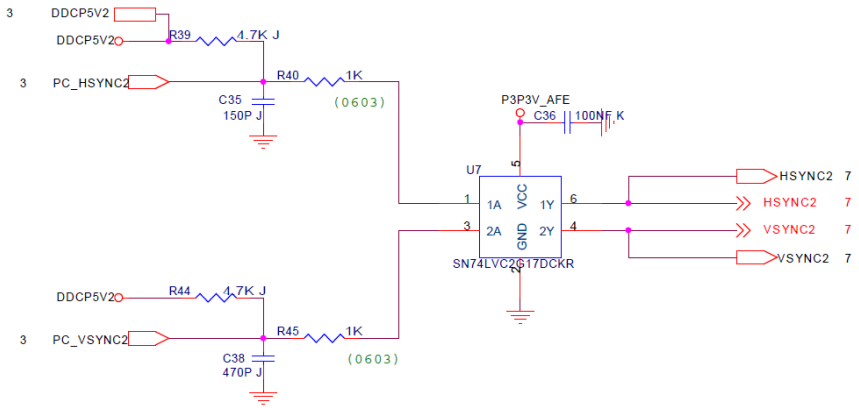

D-sub RGB Output

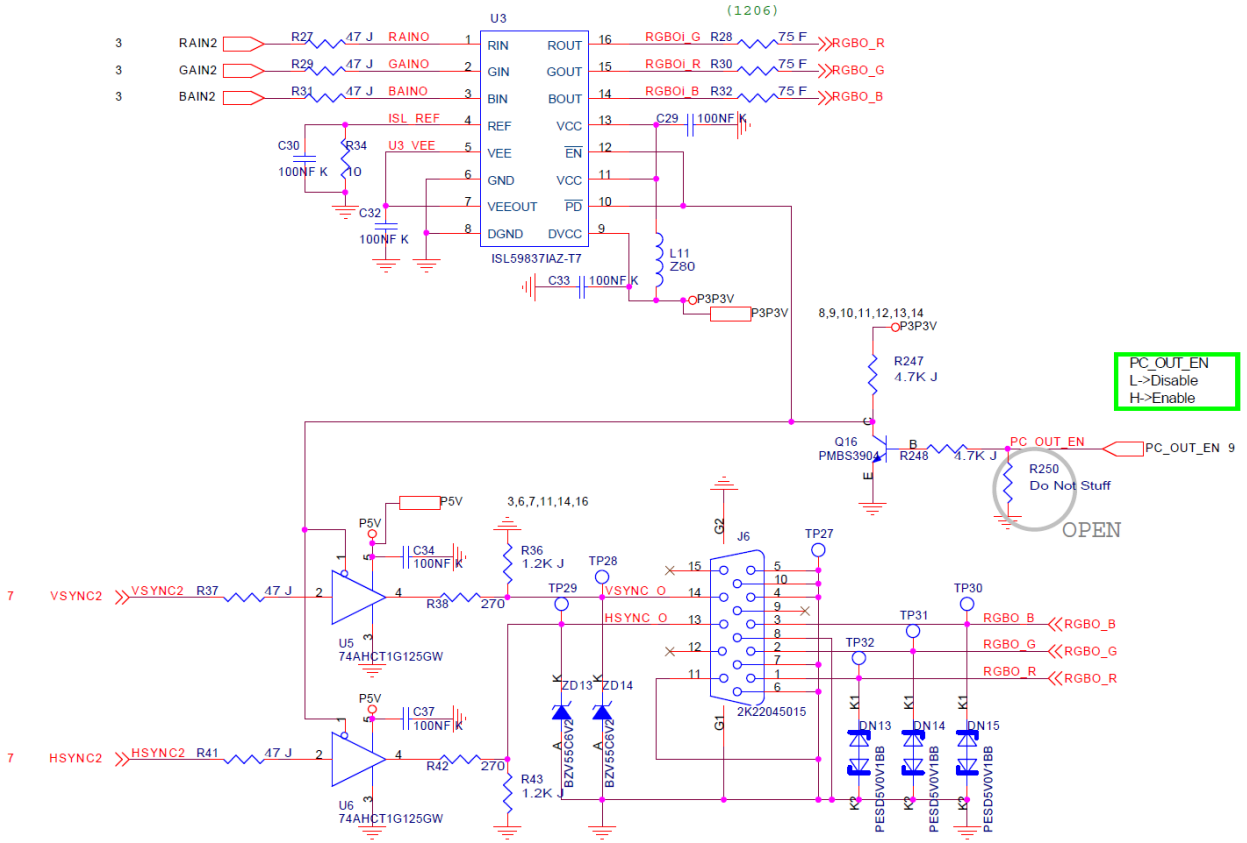

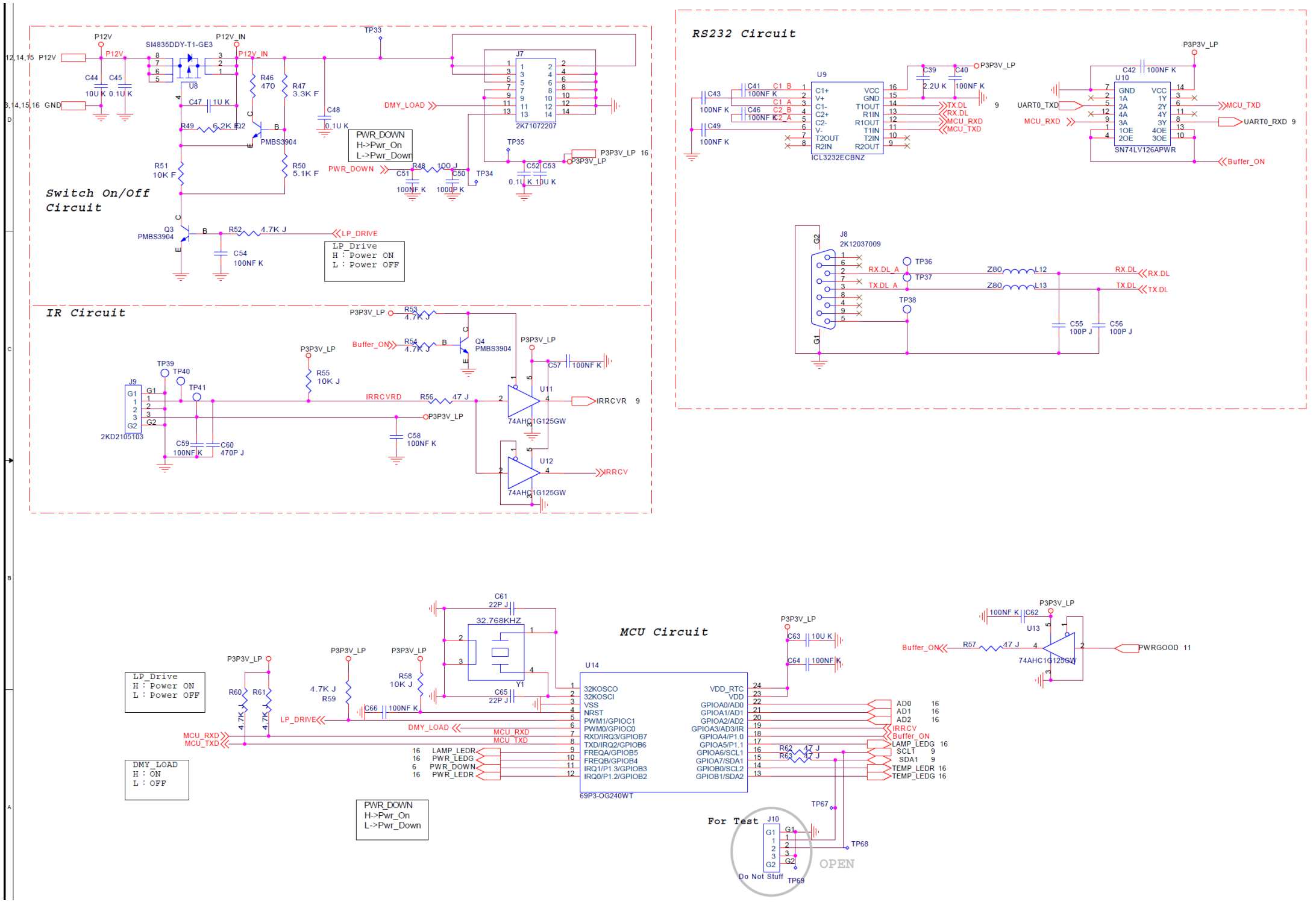
Switch On/Off Circuit
P12V
P12V_IN
SI4835DDY-T1-GE3
U8
TP33
J7
2K71072207
DMY_LOAD
PWR_DOWN
H->Pwr_On
L->Pwr_Down
PMBS3904
TP35
TP34
P3P3V_LP
LP_DRIVE
LP_Drive
H : Power ON
L : Power OFF
IR Circuit
TP39
TP40
TP41
J9
2KD2105103
Buffer_ON
IRRCVRD
IRRCVR
IRRCV
74AHC1G125GW
RS232 Circuit
U9
ICL3232ECBNZ
U10
SN74LV126APWR
UART0_TXD
UART0_RXD
MCU_TXD
MCU_RXD
Buffer_ON
J8
2K12037009
TP36
TP37
TP38
RX.DL_A
TX.DL_A
RX.DL
TX.DL
MCU Circuit
U14
69P3-OG240WT
32.768KHZ
LP_DRIVE
DMY_LOAD
MCU_RXD
MCU_TXD
LAMP_LEDR
PWR_LEDG
PWR_DOWN
PWR_LEDR
AD0
AD1
AD2
IRRCV
Buffer_ON
LAMP_LEDG
SCL1
SDA1
TEMP_LEDR
TEMP_LEDG
PWRGOOD
For Test
Do Not Stuff
OPEN
TP67
TP68
TP69

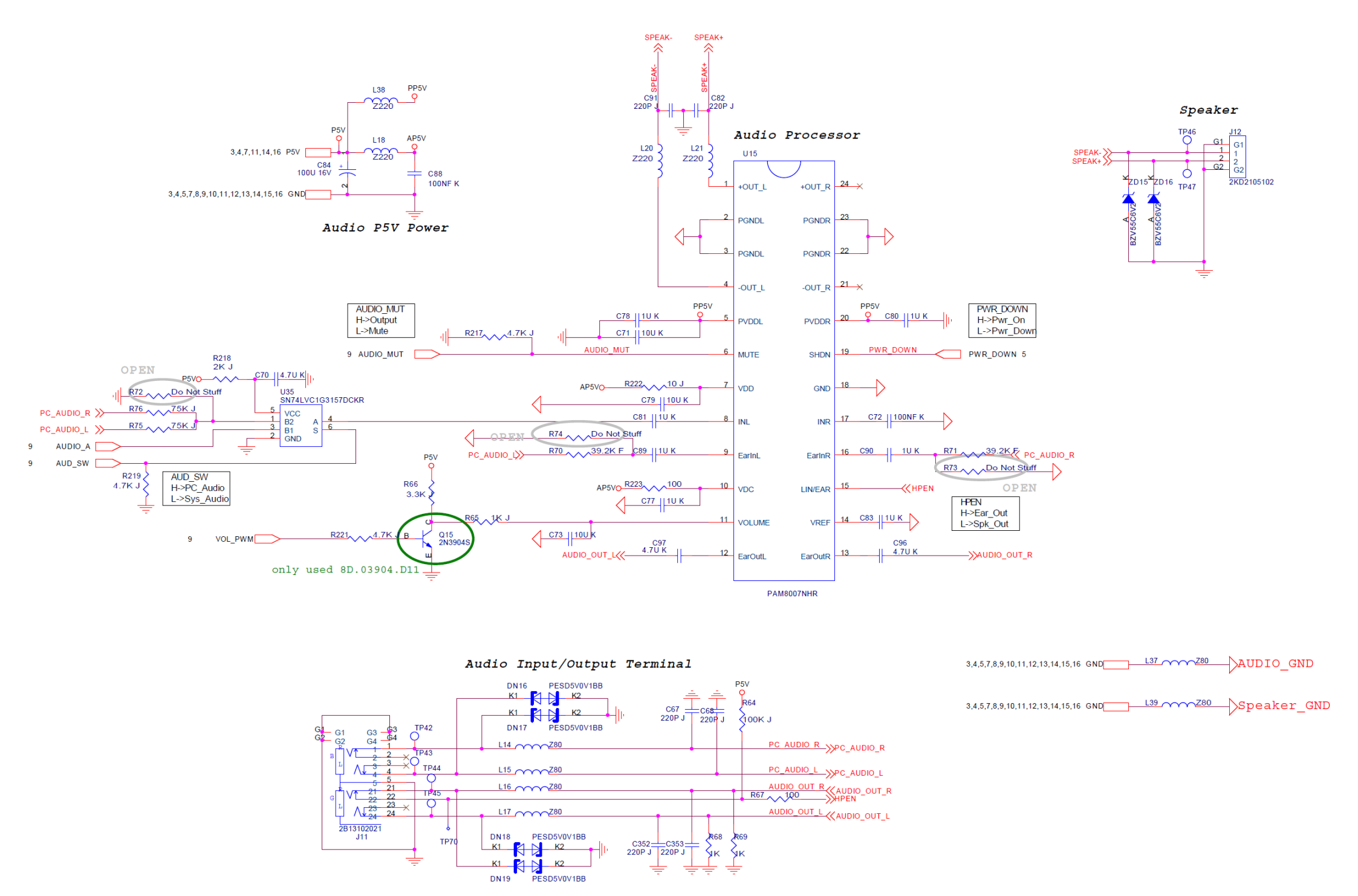
Audio P5V Power
L38 Z220
PP5V
P5V
L18 Z220
AP5V
3,4,7,11,14,16 P5V
C84 100U 16V
C88 100NF K
3,4,5,7,8,9,10,11,12,13,14,15,16 GND
SPEAK-
SPEAK+
C91 220P J
C82 220P J
L20 Z220
L21 Z220
Audio Processor
U15
+OUT_L
+OUT_R
PGNDL
PGNDR
-OUT_L
-OUT_R
PVDDL
PVDDR
MUTE
SHDN
VDD
GND
INL
INR
EarInL
EarInR
VDC
LIN/EAR
VOLUME
VREF
EarOutL
EarOutR
PAM8007NHR
Speaker
TP46
TP47
J12
2KD2105102
ZD15
ZD16
BZV55C6V2
AUDIO_MUT
H->Output
L->Mute
PWR_DOWN
H->Pwr_On
L->Pwr_Down
HPEN
H->Ear_Out
L->Spk_Out
R217 4.7K J
C78 1U K
C71 10U K
C80 1U K
PWR_DOWN 5
R218 2K J
OPEN
R72 Do Not Stuff
C70 4.7U K
U35
SN74LVC1G3157DCKR
PC_AUDIO_R
PC_AUDIO_L
R76 75K J
R75 75K J
AUDIO_A
AUD_SW
R219 4.7K J
AUD_SW
H->PC_Audio
L->Sys_Audio
R222 10 J
C79 10U K
C81 1U K
R74 Do Not Stuff
R70 39.2K F
C89 1U K
C90 1U K
R71 39.2K F
R73 Do Not Stuff
HPEN
R223 100
C77 1U K
R66 3.3K
R65 1K J
R221 4.7K J
Q15 2N3904S
VOL_PWM
C73 10U K
C97 4.7U K
C96 4.7U K
AUDIO_OUT_L
AUDIO_OUT_R
only used 8D.03904.D11
Audio Input/Output Terminal
TP42
TP43
TP44
TP45
TP70
2B13102021
J11
DN16
DN17
DN18
DN19
PESD5V0V1BB
C67 220P J
C68 220P J
R64 100K J
L14 Z80
L15 Z80
L16 Z80
L17 Z80
PC_AUDIO_R
PC_AUDIO_L
AUDIO_OUT_R
AUDIO_OUT_L
R67 100
HPEN
C352 220P J
C353 220P J
R68 1K
R69 1K
3,4,5,7,8,9,10,11,12,13,14,15,16 GND
L37 Z80
AUDIO_GND
L39 Z80
Speaker_GND

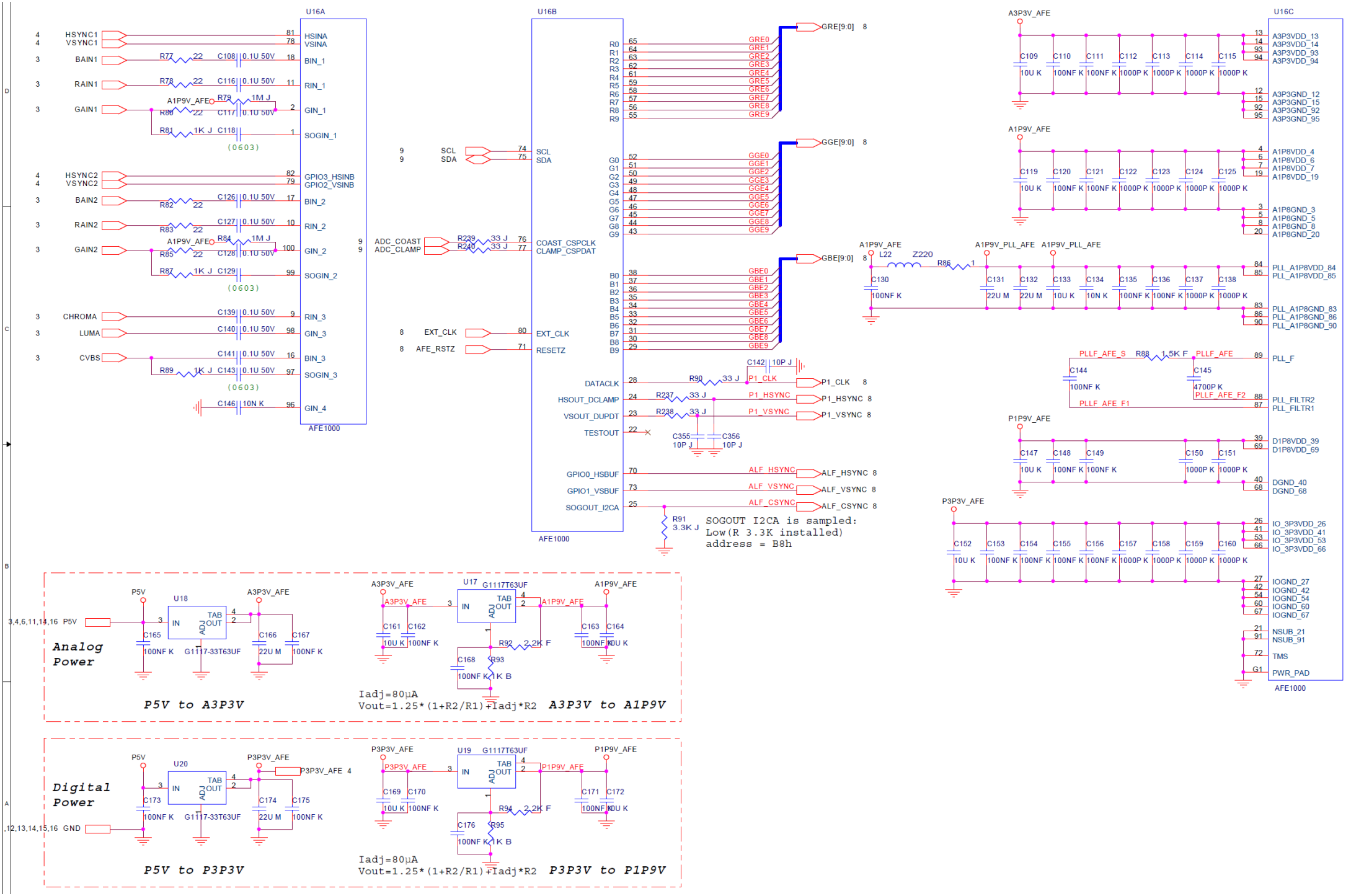
U16A
HSYNC1
VSYNC1
BAIN1
RAIN1
GAIN1
HSYNC2
VSYNC2
BAIN2
RAIN2
GAIN2
CHROMA
LUMA
CVBS
HSINA
VSINA
BIN_1
RIN_1
GIN_1
SOGIN_1
GPIO3_HSINB
GPIO2_VSINB
BIN_2
RIN_2
GIN_2
SOGIN_2
RIN_3
GIN_3
BIN_3
SOGIN_3
GIN_4
A1P9V_AFE
(0603)
AFE1000
U16B
SCL
SDA
ADC_COAST
ADC_CLAMP
COAST_CSPCLK
CLAMP_CSPDAT
EXT_CLK
AFE_RSTZ
RESETZ
GRE[9:0]
GGE[9:0]
GBE[9:0]
DATACLK
HSOUT_DCLAMP
VSOUT_DUPDT
TESTOUT
P1_CLK
P1_HSYNC
P1_VSYNC
GPIO0_HSBUF
GPIO1_VSBUF
SOGOUT_I2CA
ALF_HSYNC
ALF_VSYNC
ALF_CSYNC
R91 3.3K J
SOGOUT I2CA is sampled:
Low(R 3.3K installed)
address = B8h
U16C
A3P3V_AFE
A1P9V_AFE
A1P9V_PLL_AFE
P1P9V_AFE
P3P3V_AFE
PLLF_AFE_S
PLLF_AFE
PLLF_AFE_F1
PLLF_AFE_F2
A3P3VDD_13
A3P3VDD_14
A3P3VDD_93
A3P3VDD_94
A3P3GND_12
A3P3GND_15
A3P3GND_92
A3P3GND_95
A1P8VDD_4
A1P8VDD_6
A1P8VDD_7
A1P8VDD_19
A1P8GND_3
A1P8GND_5
A1P8GND_8
A1P8GND_20
PLL_A1P8VDD_84
PLL_A1P8VDD_85
PLL_A1P8GND_83
PLL_A1P8GND_86
PLL_A1P8GND_90
PLL_F
PLL_FILTR2
PLL_FILTR1
D1P8VDD_39
D1P8VDD_69
DGND_40
DGND_68
IO_3P3VDD_26
IO_3P3VDD_41
IO_3P3VDD_53
IO_3P3VDD_66
IOGND_27
IOGND_42
IOGND_54
IOGND_60
IOGND_67
NSUB_21
NSUB_91
TMS
PWR_PAD
Analog Power
P5V to A3P3V
U18
G1117-33T63UF
Iadj=80µA
Vout=1.25*(1+R2/R1)+Iadj*R2
A3P3V to A1P9V
U17
G1117T63UF
Digital Power
P5V to P3P3V
U20
P3P3V to P1P9V
U19

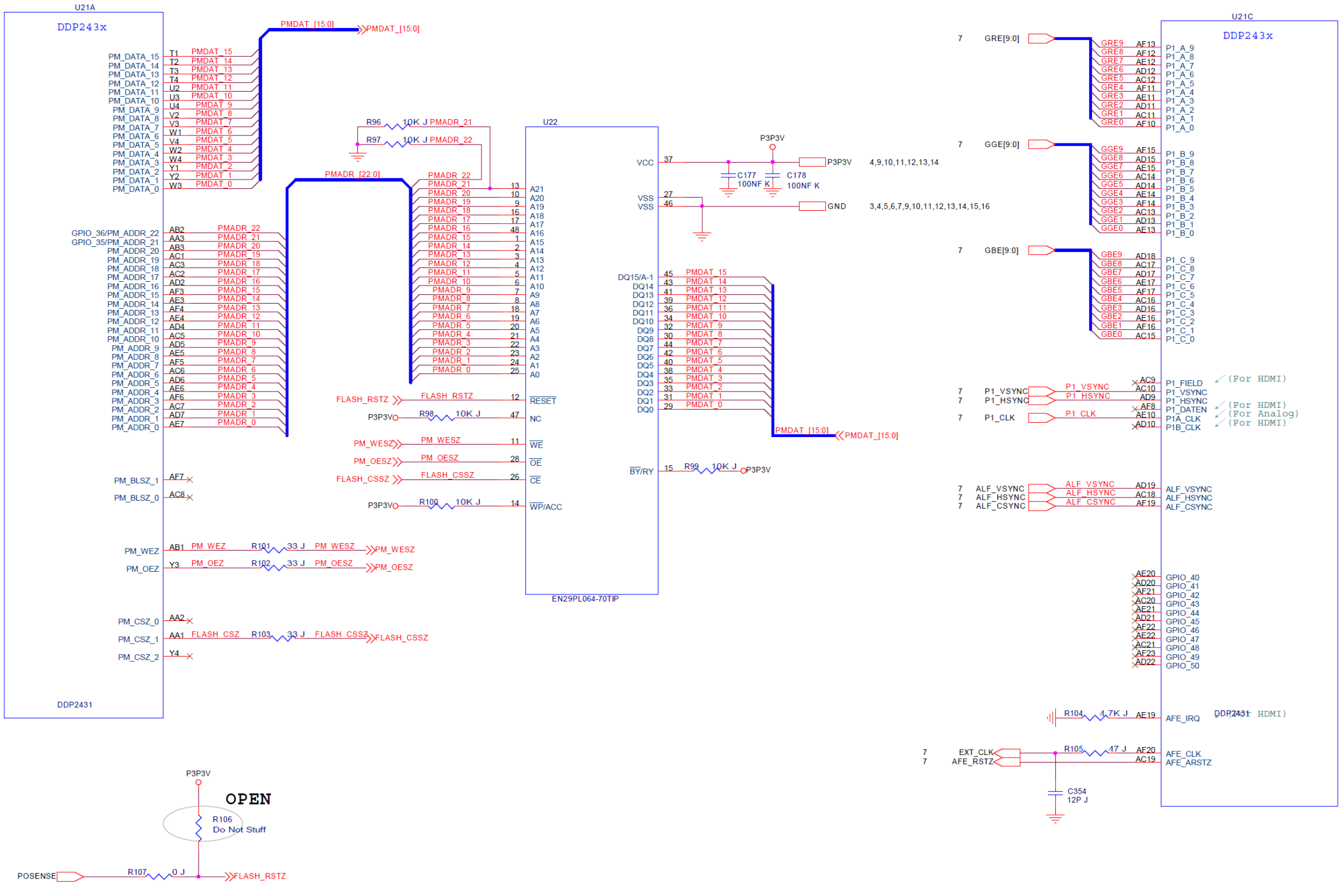
U21A
DDP243x
DDP2431
PMDAT_[15:0]
PMDAT_[15:0]
PM_DATA_15
PM_DATA_14
PM_DATA_13
PM_DATA_12
PM_DATA_11
PM_DATA_10
PM_DATA_9
PM_DATA_8
PM_DATA_7
PM_DATA_6
PM_DATA_5
PM_DATA_4
PM_DATA_3
PM_DATA_2
PM_DATA_1
PM_DATA_0
T1 PMDAT_15
T2 PMDAT_14
T3 PMDAT_13
T4 PMDAT_12
U2 PMDAT_11
U3 PMDAT_10
U4 PMDAT_9
V2 PMDAT_8
V3 PMDAT_7
W1 PMDAT_6
V4 PMDAT_5
W2 PMDAT_4
W4 PMDAT_3
Y1 PMDAT_2
Y2 PMDAT_1
W3 PMDAT_0
PMADR_[22:0]
GPIO_36/PM_ADDR_22
GPIO_35/PM_ADDR_21
PM_ADDR_20
PM_ADDR_19
PM_ADDR_18
PM_ADDR_17
PM_ADDR_16
PM_ADDR_15
PM_ADDR_14
PM_ADDR_13
PM_ADDR_12
PM_ADDR_11
PM_ADDR_10
PM_ADDR_9
PM_ADDR_8
PM_ADDR_7
PM_ADDR_6
PM_ADDR_5
PM_ADDR_4
PM_ADDR_3
PM_ADDR_2
PM_ADDR_1
PM_ADDR_0
AB2 PMADR_22
AA3 PMADR_21
AB3 PMADR_20
AC1 PMADR_19
AC3 PMADR_18
AC2 PMADR_17
AD2 PMADR_16
AF3 PMADR_15
AE3 PMADR_14
AF4 PMADR_13
AE4 PMADR_12
AD4 PMADR_11
AC5 PMADR_10
AD5 PMADR_9
AE5 PMADR_8
AF5 PMADR_7
AC6 PMADR_6
AD6 PMADR_5
AE6 PMADR_4
AF6 PMADR_3
AC7 PMADR_2
AD7 PMADR_1
AE7 PMADR_0
PM_BLSZ_1
PM_BLSZ_0
AF7
AC8
PM_WEZ
PM_OEZ
AB1 PM_WEZ
Y3 PM_OEZ
R101 33 J PM_WESZ
R102 33 J PM_OESZ
PM_WESZ
PM_OESZ
PM_CSZ_0
PM_CSZ_1
PM_CSZ_2
AA2
AA1 FLASH_CSZ
Y4
R103 33 J FLASH_CSSZ
FLASH_CSSZ
R96 10K J PMADR_21
R97 10K J PMADR_22
U22
PMADR_22
PMADR_21
PMADR_20
PMADR_19
PMADR_18
PMADR_17
PMADR_16
PMADR_15
PMADR_14
PMADR_13
PMADR_12
PMADR_11
PMADR_10
PMADR_9
PMADR_8
PMADR_7
PMADR_6
PMADR_5
PMADR_4
PMADR_3
PMADR_2
PMADR_1
PMADR_0
13 A21
10 A20
9 A19
16 A18
17 A17
48 A16
1 A15
2 A14
3 A13
4 A12
5 A11
6 A10
7 A9
8 A8
18 A7
19 A6
20 A5
21 A4
22 A3
23 A2
24 A1
25 A0
FLASH_RSTZ
FLASH_RSTZ
12 RESET
P3P3V
R98 10K J
47 NC
PM_WESZ
PM_WESZ
11 WE
PM_OESZ
PM_OESZ
28 OE
FLASH_CSSZ
FLASH_CSSZ
26 CE
P3P3V
R100 10K J
14 WP/ACC
EN29PL064-70TIP
VCC 37
VSS 27
VSS 46
P3P3V
C177 100NF K
C178 100NF K
P3P3V 4,9,10,11,12,13,14
GND 3,4,5,6,7,9,10,11,12,13,14,15,16
DQ15/A-1 45 PMDAT_15
DQ14 43 PMDAT_14
DQ13 41 PMDAT_13
DQ12 39 PMDAT_12
DQ11 36 PMDAT_11
DQ10 34 PMDAT_10
DQ9 32 PMDAT_9
DQ8 30 PMDAT_8
DQ7 44 PMDAT_7
DQ6 42 PMDAT_6
DQ5 40 PMDAT_5
DQ4 38 PMDAT_4
DQ3 35 PMDAT_3
DQ2 33 PMDAT_2
DQ1 31 PMDAT_1
DQ0 29 PMDAT_0
PMDAT_[15:0]
PMDAT_[15:0]
BY/RY 15 R99 10K J P3P3V
U21C
DDP243x
7 GRE[9:0]
GRE9 AF13 P1_A_9
GRE8 AF12 P1_A_8
GRE7 AE12 P1_A_7
GRE6 AD12 P1_A_6
GRE5 AC12 P1_A_5
GRE4 AF11 P1_A_4
GRE3 AE11 P1_A_3
GRE2 AD11 P1_A_2
GRE1 AC11 P1_A_1
GRE0 AF10 P1_A_0
7 GGE[9:0]
GGE9 AF15 P1_B_9
GGE8 AD15 P1_B_8
GGE7 AE15 P1_B_7
GGE6 AC14 P1_B_6
GGE5 AD14 P1_B_5
GGE4 AE14 P1_B_4
GGE3 AF14 P1_B_3
GGE2 AC13 P1_B_2
GGE1 AD13 P1_B_1
GGE0 AE13 P1_B_0
7 GBE[9:0]
GBE9 AD18 P1_C_9
GBE8 AC17 P1_C_8
GBE7 AD17 P1_C_7
GBE6 AE17 P1_C_6
GBE5 AF17 P1_C_5
GBE4 AC16 P1_C_4
GBE3 AD16 P1_C_3
GBE2 AE16 P1_C_2
GBE1 AF16 P1_C_1
GBE0 AC15 P1_C_0
7 P1_VSYNC
7 P1_HSYNC
P1_VSYNC
P1_HSYNC
AC9 P1_FIELD (For HDMI)
AC10 P1_VSYNC
AD9 P1_HSYNC
AF8 P1_DATEN (For HDMI)
AE10 P1A_CLK (For Analog)
AD10 P1B_CLK (For HDMI)
7 P1_CLK
P1_CLK
7 ALF_VSYNC
7 ALF_HSYNC
7 ALF_CSYNC
ALF_VSYNC
ALF_HSYNC
ALF_CSYNC
AD19 ALF_VSYNC
AC18 ALF_HSYNC
AF19 ALF_CSYNC
AE20 GPIO_40
AD20 GPIO_41
AF21 GPIO_42
AC20 GPIO_43
AE21 GPIO_44
AD21 GPIO_45
AF22 GPIO_46
AE22 GPIO_47
AC21 GPIO_48
AF23 GPIO_49
AD22 GPIO_50
R104 4.7K J
AE19 AFE_IRQ
DDP2431 (For HDMI)
7 EXT_CLK
7 AFE_RSTZ
R105 47 J
AF20 AFE_CLK
AC19 AFE_ARSTZ
C354 12P J
P3P3V
OPEN
R106 Do Not Stuff
11 POSENSE
R107 0 J
FLASH_RSTZ

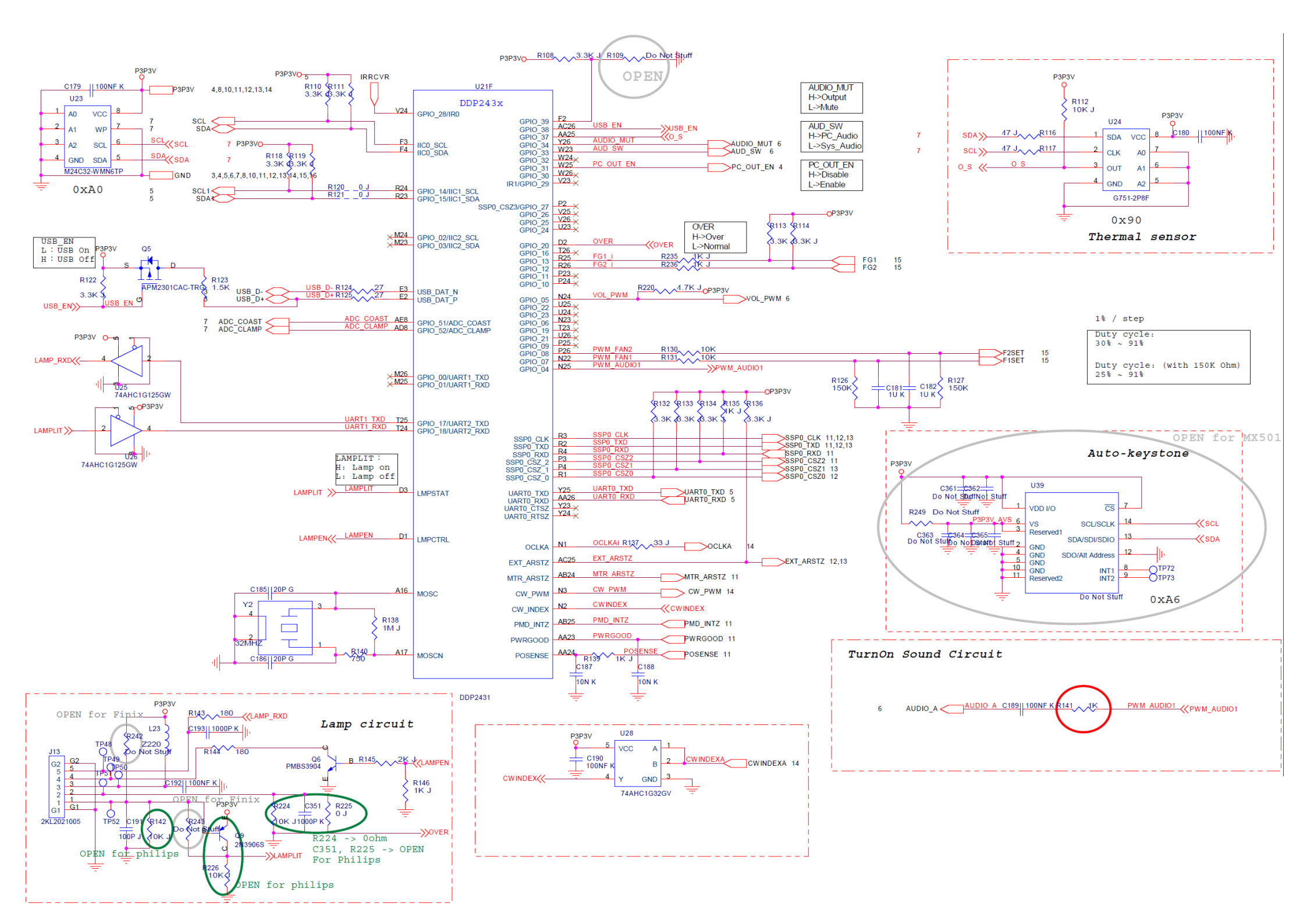
U21F
DDP243x
DDP2431
M24C32-WMN6TP
0xA0
APM2301CAC-TRG
74AHC1G125GW
74AHC1G32GV
G751-2P8F
0x90
Thermal sensor
Auto-keystone
OPEN for MX501
0xA6
Lamp circuit
OPEN for Finix
OPEN for philips
TurnOn Sound Circuit
USB_EN
L : USB On
H : USB Off
AUDIO_MUT
H->Output
L->Mute
AUD_SW
H->PC_Audio
L->Sys_Audio
PC_OUT_EN
H->Disable
L->Enable
OVER
H->Over
L->Normal
LAMPLIT :
H: Lamp on
L: Lamp off
1% / step
Duty cycle:
30% ~ 91%
Duty cycle: (with 150K Ohm)
25% ~ 91%
R224 -> 0ohm
C351, R225 -> OPEN
For Philips
Do Not Stuff
OPEN

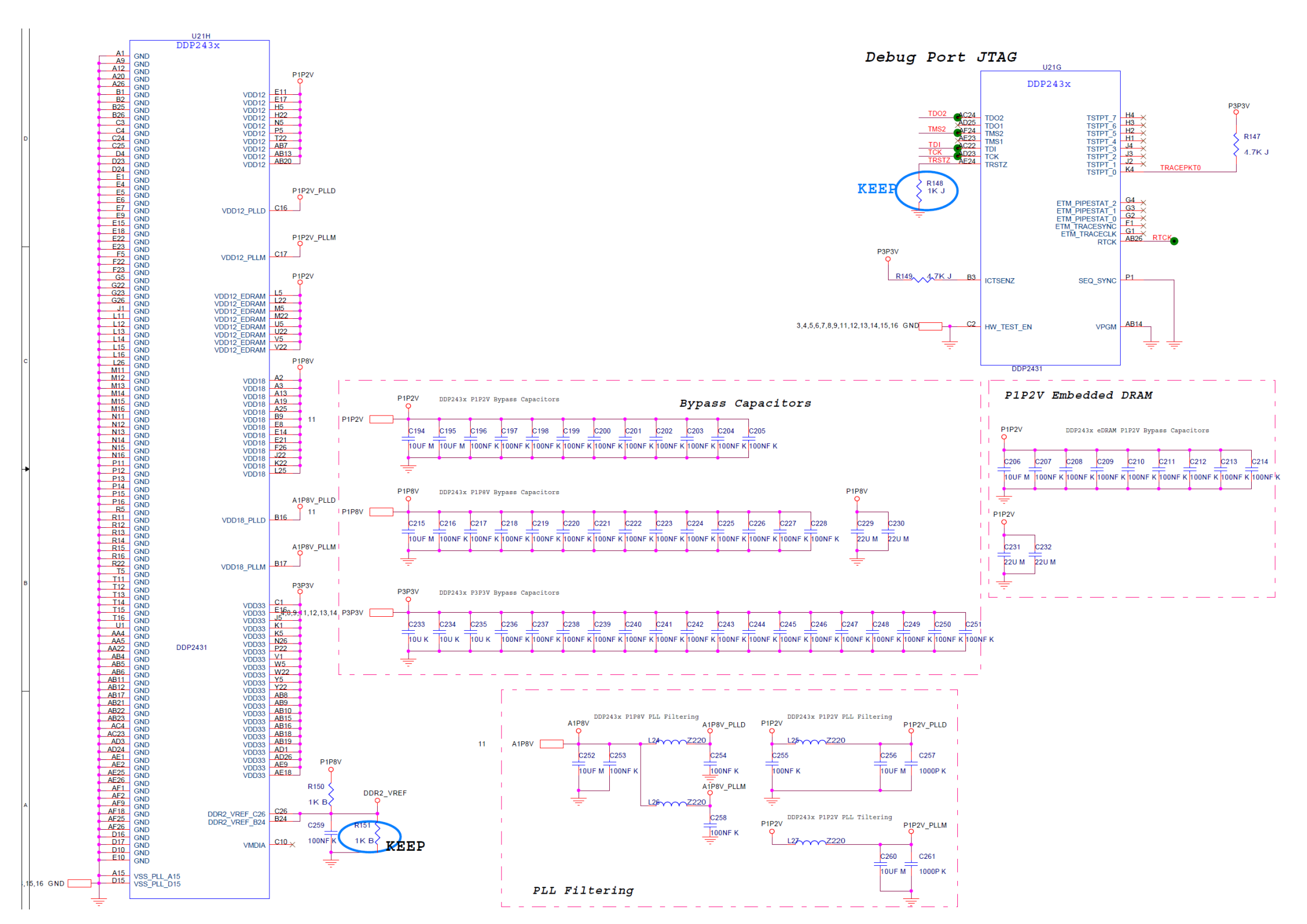
Debug Port JTAG
U21G
DDP243x
DDP2431
TDO2
TMS2
TDI
TCK
TRSTZ
KEEP
R148
1K J
R147
4.7K J
P3P3V
TRACEPKT0
RTCK
R149
4.7K J
ICTSENZ
SEQ_SYNC
HW_TEST_EN
VPGM
U21H
DDP243x
DDP2431
Bypass Capacitors
P1P2V Embedded DRAM
DDP243x P1P2V Bypass Capacitors
DDP243x P1P8V Bypass Capacitors
DDP243x P3P3V Bypass Capacitors
DDP243x eDRAM P1P2V Bypass Capacitors
DDP243x P1P8V PLL Filtering
DDP243x P1P2V PLL Filtering
PLL Filtering
R150
1K B
R151
1K B
KEEP
DDR2_VREF
DDR2_VREF_C26
DDR2_VREF_B24
VMDIA
VSS_PLL_A15
VSS_PLL_D15

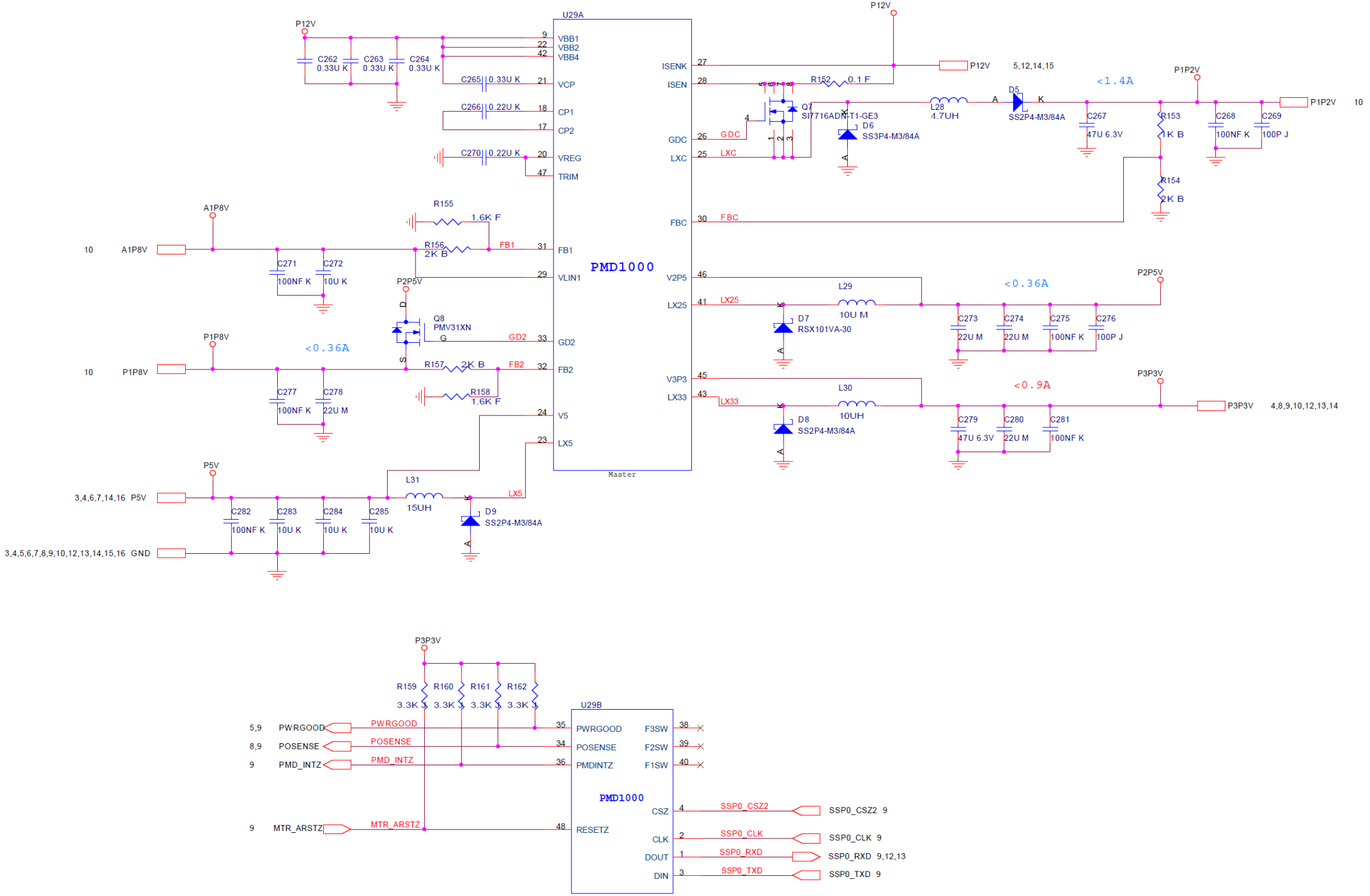
U29A
PMD1000
Master
P12V
C262 0.33U K
C263 0.33U K
C264 0.33U K
C265 0.33U K
C266 0.22U K
C270 0.22U K
VBB1
VBB2
VBB4
VCP
CP1
CP2
VREG
TRIM
ISENK
ISEN
GDC
LXC
FBC
R152 0.1 F
Q7
SI7716ADN-T1-GE3
D6
SS3P4-M3/84A
L28
4.7UH
D5
SS2P4-M3/84A
<1.4A
C267
47U 6.3V
R153
1K B
R154
2K B
C268
100NF K
C269
100P J
P1P2V
A1P8V
R155
1.6K F
R156
2K B
FB1
C271
100NF K
C272
10U K
P2P5V
Q8
PMV31XN
GD2
P1P8V
<0.36A
R157 2K B
FB2
R158
1.6K F
C277
100NF K
C278
22U M
V5
LX5
V2P5
LX25
L29
10U M
D7
RSX101VA-30
C273
22U M
C274
22U M
C275
100NF K
C276
100P J
P2P5V
V3P3
LX33
L30
10UH
D8
SS2P4-M3/84A
<0.9A
C279
47U 6.3V
C280
22U M
C281
100NF K
P3P3V
P5V
L31
15UH
D9
SS2P4-M3/84A
C282
100NF K
C283
10U K
C284
10U K
C285
10U K
GND
P3P3V
R159
R160
R161
R162
3.3K J
U29B
PWRGOOD
POSENSE
PMD_INTZ
MTR_ARSTZ
F3SW
F2SW
F1SW
PMD1000
CSZ
CLK
DOUT
DIN
SSP0_CSZ2
SSP0_CLK
SSP0_RXD
SSP0_TXD

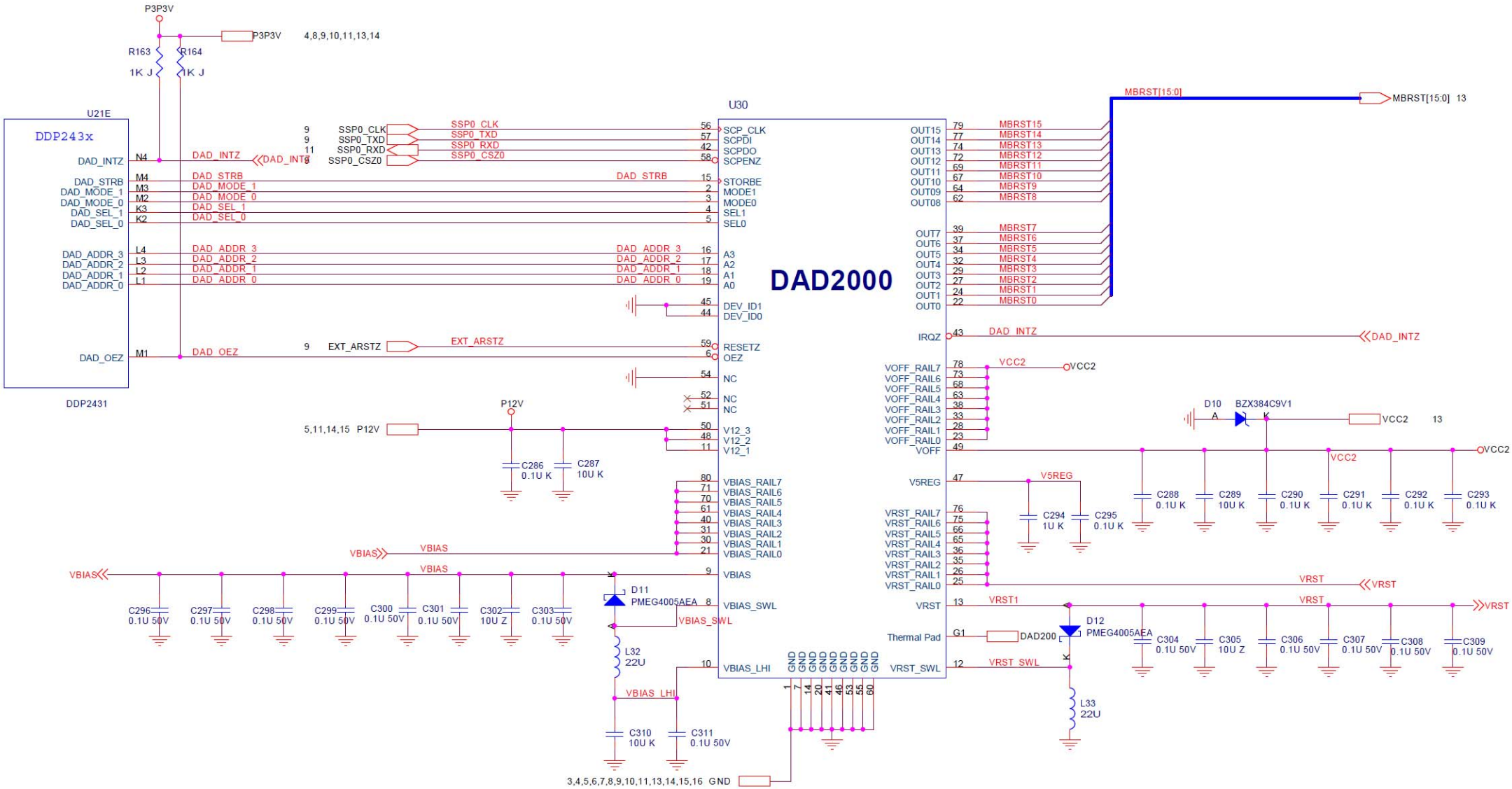
P3P3V
R163
1K J
R164
1K J
P3P3V
4,8,9,10,11,13,14
U21E
DDP243x
DAD_INTZ
DAD_STRB
DAD_MODE_1
DAD_MODE_0
DAD_SEL_1
DAD_SEL_0
DAD_ADDR_3
DAD_ADDR_2
DAD_ADDR_1
DAD_ADDR_0
DAD_OEZ
DDP2431
SSP0_CLK
SSP0_TXD
SSP0_RXD
SSP0_CSZ0
EXT_ARSTZ
U30
DAD2000
SCP_CLK
SCPDI
SCPDO
SCPENZ
STORBE
MODE1
MODE0
SEL1
SEL0
A3
A2
A1
A0
DEV_ID1
DEV_ID0
RESETZ
OEZ
NC
V12_3
V12_2
V12_1
VBIAS_RAIL7
VBIAS_RAIL6
VBIAS_RAIL5
VBIAS_RAIL4
VBIAS_RAIL3
VBIAS_RAIL2
VBIAS_RAIL1
VBIAS_RAIL0
VBIAS
VBIAS_SWL
VBIAS_LHI
GND
MBRST[15:0]
MBRST15
MBRST14
MBRST13
MBRST12
MBRST11
MBRST10
MBRST9
MBRST8
MBRST7
MBRST6
MBRST5
MBRST4
MBRST3
MBRST2
MBRST1
MBRST0
IRQZ
VOFF_RAIL7
VOFF_RAIL6
VOFF_RAIL5
VOFF_RAIL4
VOFF_RAIL3
VOFF_RAIL2
VOFF_RAIL1
VOFF_RAIL0
VOFF
V5REG
VRST_RAIL7
VRST_RAIL6
VRST_RAIL5
VRST_RAIL4
VRST_RAIL3
VRST_RAIL2
VRST_RAIL1
VRST_RAIL0
VRST
Thermal Pad
VRST_SWL
P12V
5,11,14,15 P12V
C286 0.1U K
C287 10U K
D11 PMEG4005AEA
L32 22U
C296 0.1U 50V
C297 0.1U 50V
C298 0.1U 50V
C299 0.1U 50V
C300 0.1U 50V
C301 0.1U 50V
C302 10U Z
C303 0.1U 50V
C310 10U K
C311 0.1U 50V
3,4,5,6,7,8,9,10,11,13,14,15,16 GND
D10 BZX384C9V1
VCC2
13
C288 0.1U K
C289 10U K
C290 0.1U K
C291 0.1U K
C292 0.1U K
C293 0.1U K
C294 1U K
C295 0.1U K
DAD200
D12 PMEG4005AEA
L33 22U
VRST1
C304 0.1U 50V
C305 10U Z
C306 0.1U 50V
C307 0.1U 50V
C308 0.1U 50V
C309 0.1U 50V

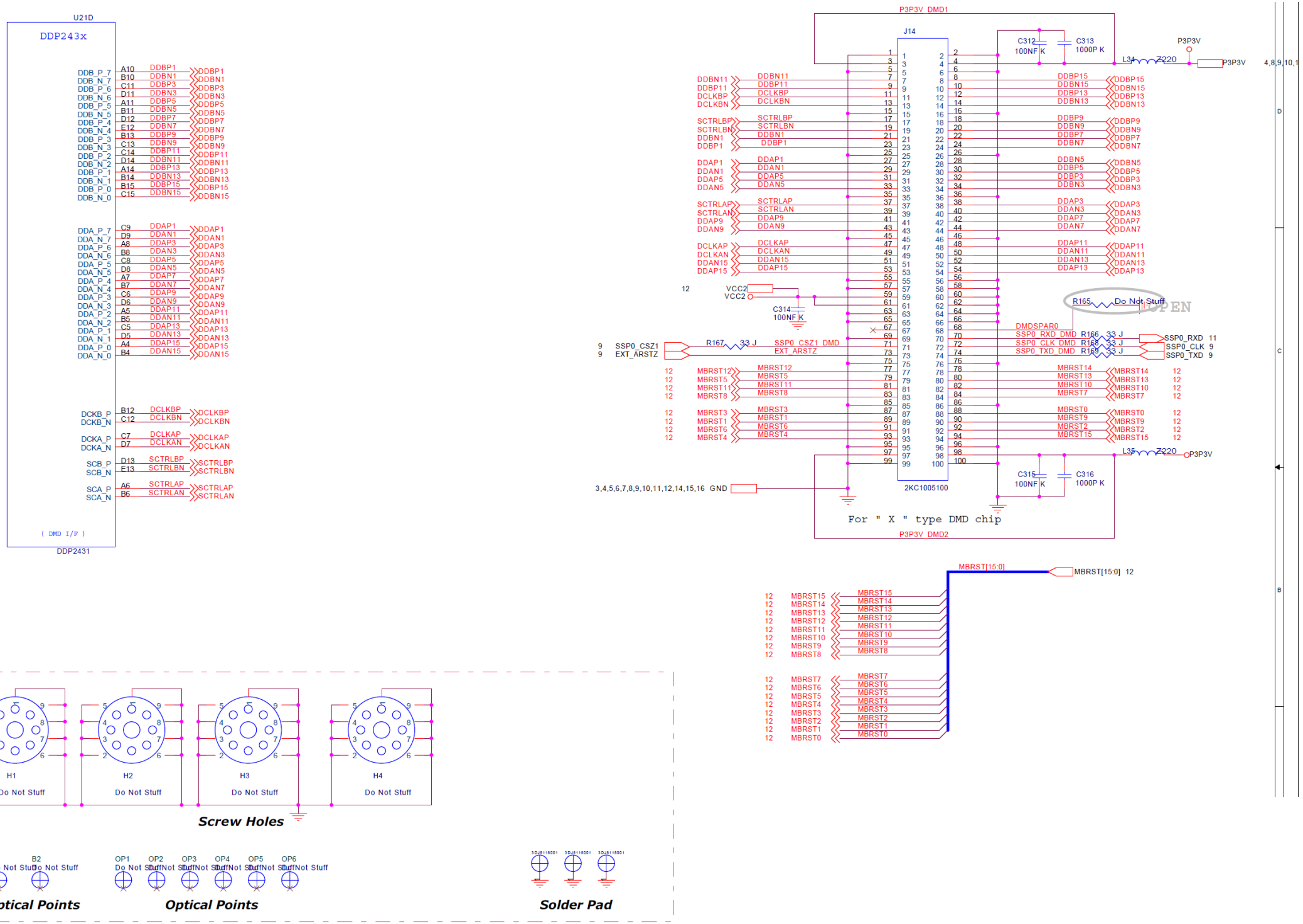
U21D
DDP243x
DDB_P_7 DDB_N_7 DDB_P_6 DDB_N_6 DDB_P_5 DDB_N_5 DDB_P_4 DDB_N_4 DDB_P_3 DDB_N_3 DDB_P_2 DDB_N_2 DDB_P_1 DDB_N_1 DDB_P_0 DDB_N_0
A10 B10 C11 D11 A11 B11 D12 E12 B13 C13 C14 D14 A14 B14 B15 C15
DDBP1 DDBN1 DDBP3 DDBN3 DDBP5 DDBN5 DDBP7 DDBN7 DDBP9 DDBN9 DDBP11 DDBN11 DDBP13 DDBN13 DDBP15 DDBN15
DDA_P_7 DDA_N_7 DDA_P_6 DDA_N_6 DDA_P_5 DDA_N_5 DDA_P_4 DDA_N_4 DDA_P_3 DDA_N_3 DDA_P_2 DDA_N_2 DDA_P_1 DDA_N_1 DDA_P_0 DDA_N_0
C9 D9 A8 B8 C8 D8 A7 B7 C6 D6 A5 B5 C5 D5 A4 B4
DDAP1 DDAN1 DDAP3 DDAN3 DDAP5 DDAN5 DDAP7 DDAN7 DDAP9 DDAN9 DDAP11 DDAN11 DDAP13 DDAN13 DDAP15 DDAN15
DCKB_P DCKB_N
B12 C12
DCLKBP DCLKBN
DCKA_P DCKA_N
C7 D7
DCLKAP DCLKAN
SCB_P SCB_N
D13 E13
SCTRLBP SCTRLBN
SCA_P SCA_N
A6 B6
SCTRLAP SCTRLAN
(DMD I/F)
DDP2431
P3P3V_DMD1
J14
C312 100NF K
C313 1000P K
P3P3V
L34 Z220
P3P3V
4,8,9,10,1
DDBN11 DDBP11 DCLKBP DCLKBN
SCTRLBP SCTRLBN DDBN1 DDBP1
DDAP1 DDAN1 DDAP5 DDAN5
SCTRLAP SCTRLAN DDAP9 DDAN9
DCLKAP DCLKAN DDAN15 DDAP15
DDBP15 DDBN15 DDBP13 DDBN13
DDBP9 DDBN9 DDBP7 DDBN7
DDBN5 DDBP5 DDBP3 DDBN3
DDAP3 DDAN3 DDAP7 DDAN7
DDAP11 DDAN11 DDAN13 DDAP13
12 VCC2 VCC2
C314 100NF K
R165 Do Not Stuff
OPEN
DMDSPAR0
SSP0_RXD_DMD R166 33 J
SSP0_CLK_DMD R168 33 J
SSP0_TXD_DMD R169 33 J
SSP0_RXD 11
SSP0_CLK 9
SSP0_TXD 9
9 SSP0_CSZ1
9 EXT_ARSTZ
R167 33 J
SSP0_CSZ1_DMD
EXT_ARSTZ
MBRST12 MBRST5 MBRST11 MBRST8
MBRST3 MBRST1 MBRST6 MBRST4
MBRST14 MBRST13 MBRST10 MBRST7
MBRST0 MBRST9 MBRST2 MBRST15
L35 Z220 P3P3V
C315 100NF K
C316 1000P K
3,4,5,6,7,8,9,10,11,12,14,15,16 GND
2KC1005100
For " X " type DMD chip
P3P3V_DMD2
MBRST[15:0]
MBRST[15:0] 12
MBRST15 MBRST14 MBRST13 MBRST12 MBRST11 MBRST10 MBRST9 MBRST8
MBRST7 MBRST6 MBRST5 MBRST4 MBRST3 MBRST2 MBRST1 MBRST0
H1 H2 H3 H4
Do Not Stuff
Screw Holes
B1 B2
Do Not Stuff
Bad Optical Points
OP1 OP2 OP3 OP4 OP5 OP6
Optical Points
Solder Pad

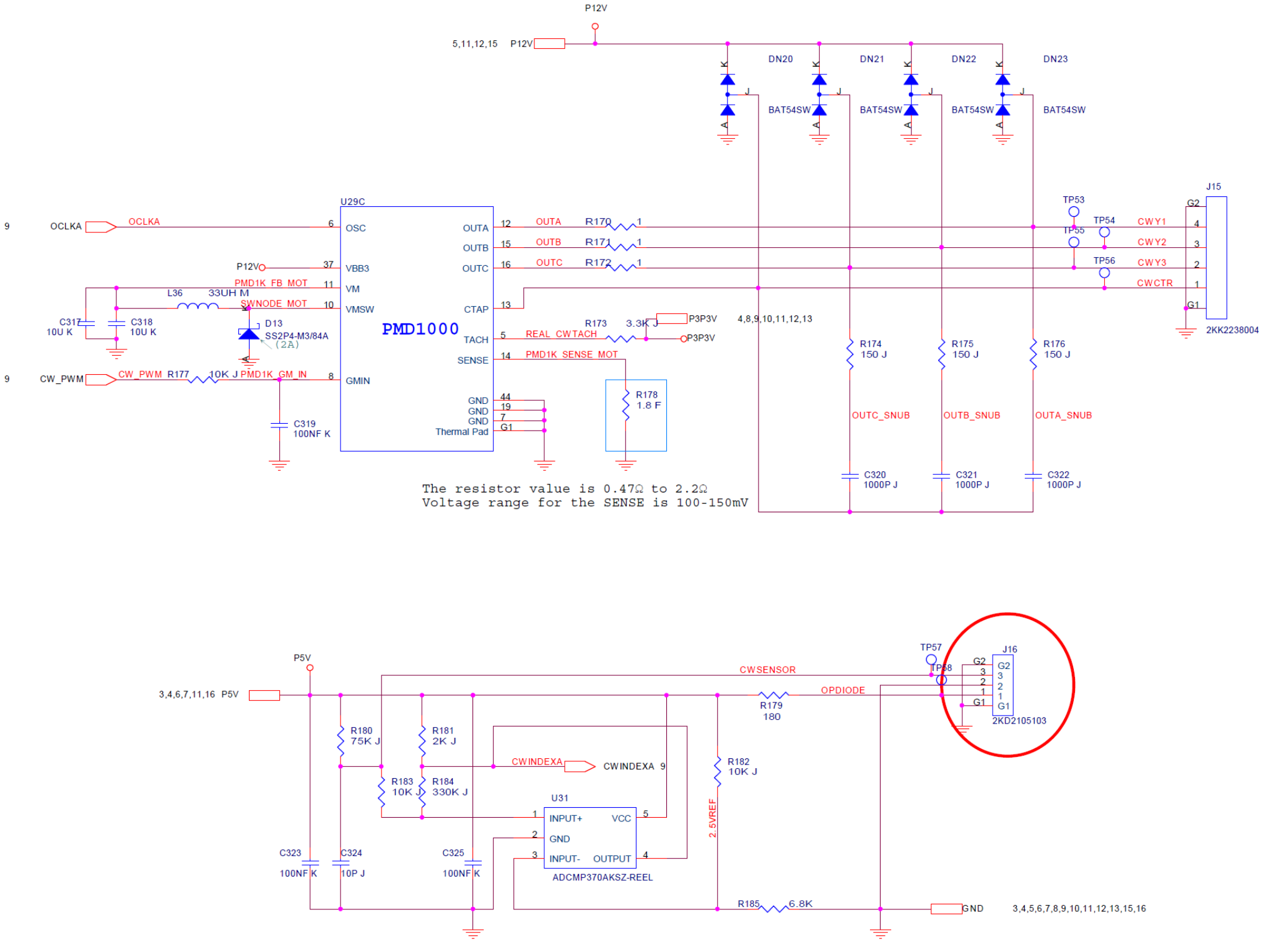
P12V
5,11,12,15 P12V
DN20
DN21
DN22
DN23
BAT54SW
BAT54SW
BAT54SW
BAT54SW
U29C
PMD1000
OCLKA
OSC
VBB3
VM
VMSW
GMIN
CTAP
TACH
SENSE
GND
GND
GND
Thermal Pad
OUTA
OUTB
OUTC
R170
R171
R172
R173 3.3K J
P3P3V
REAL_CWTACH
PMD1K_SENSE_MOT
R178 1.8 F
L36 33UH M
C317 10U K
C318 10U K
D13 SS2P4-M3/84A (2A)
PMD1K_FB_MOT
SWNODE_MOT
CW_PWM R177 10K J PMD1K_GM_IN
C319 100NF K
R174 150 J
R175 150 J
R176 150 J
OUTC_SNUB
OUTB_SNUB
OUTA_SNUB
C320 1000P J
C321 1000P J
C322 1000P J
TP53
TP54
TP55
TP56
CWY1
CWY2
CWY3
CWCTR
J15
2KK2238004
The resistor value is 0.47Ω to 2.2Ω
Voltage range for the SENSE is 100-150mV
P5V
3,4,6,7,11,16 P5V
CWSENSOR
OPDIODE
R179 180
TP57
TP58
J16
2KD2105103
R180 75K J
R181 2K J
R183 10K J
R184 330K J
CWINDEXA
CWINDEXA 9
U31
INPUT+
GND
INPUT-
VCC
OUTPUT
ADCMP370AKSZ-REEL
R182 10K J
2.5VREF
C323 100NF K
C324 10P J
C325 100NF K
R185 6.8K
GND
3,4,5,6,7,8,9,10,11,12,13,15,16

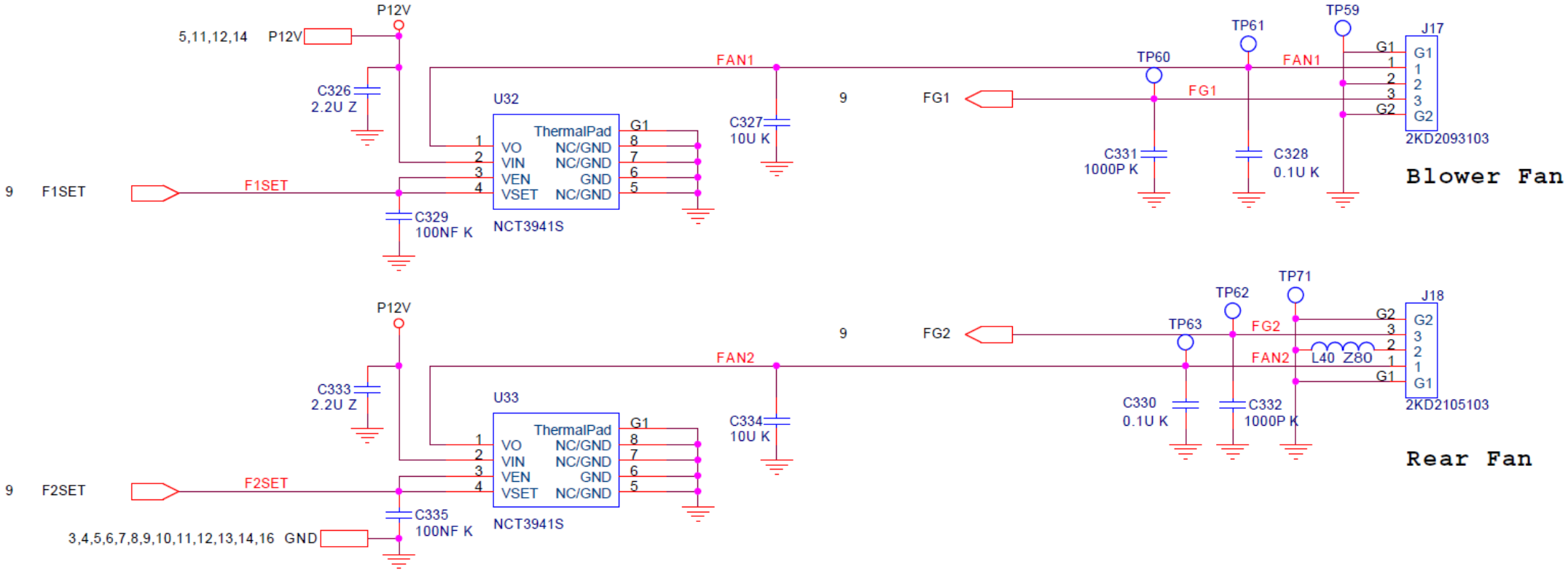
P12V
5,11,12,14 P12V
C326
2.2U Z
U32
ThermalPad
VO
VIN
VEN
VSET
NC/GND
NC/GND
GND
NC/GND
G1
1
2
3
4
8
7
6
5
NCT3941S
C329
100NF K
9 F1SET
F1SET
FAN1
C327
10U K
9 FG1
TP60
TP61
TP59
FG1
FAN1
C331
1000P K
C328
0.1U K
J17
G1
1
2
3
G2
2KD2093103
Blower Fan
P12V
C333
2.2U Z
U33
NCT3941S
C335
100NF K
3,4,5,6,7,8,9,10,11,12,13,14,16 GND
9 F2SET
F2SET
FAN2
C334
10U K
9 FG2
TP63
TP62
TP71
FG2
FAN2
L40 Z80
C330
0.1U K
C332
1000P K
J18
2KD2105103
Rear Fan

KeyPad & LED Circuit

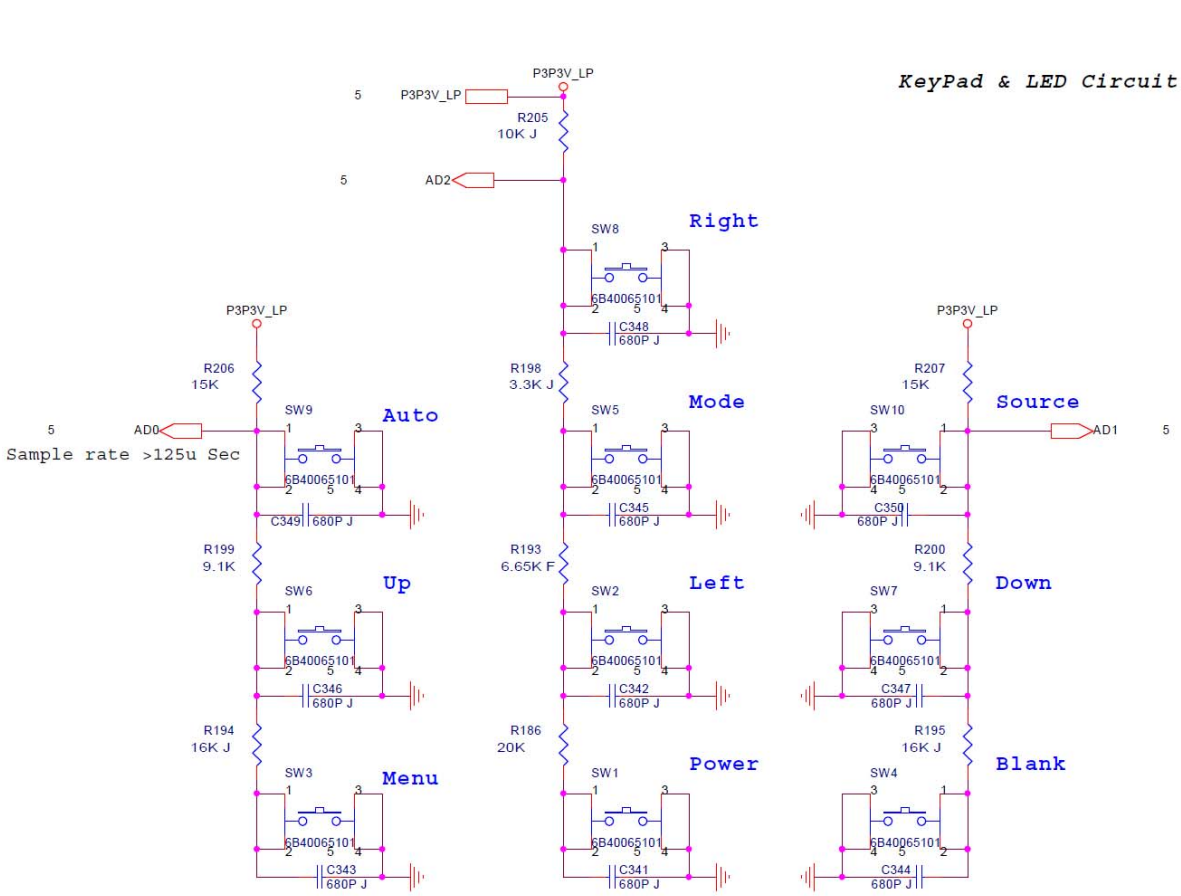

A	B	C
0~3F Auto	0~1F Right	0~3F Source
40~7F Up	20~5F Mode	40~7F Down
80~BF Menu	60~9F Left	80~BF Blank
C0~FF Releas	A0~DF Power	C0~FF Releas
	E0~FF Releas	

Base on Full Scale is equal to Vcc

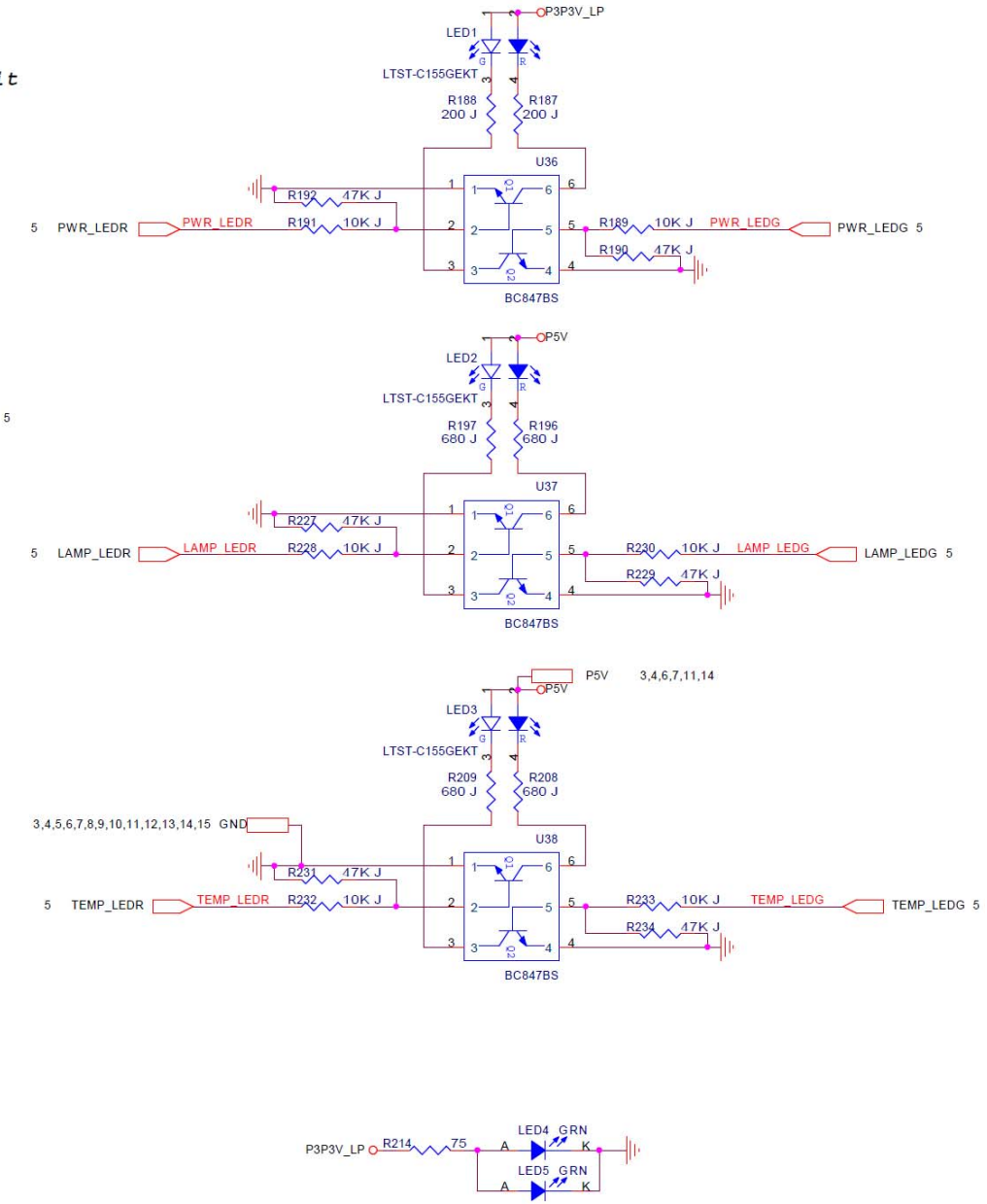

Power board:

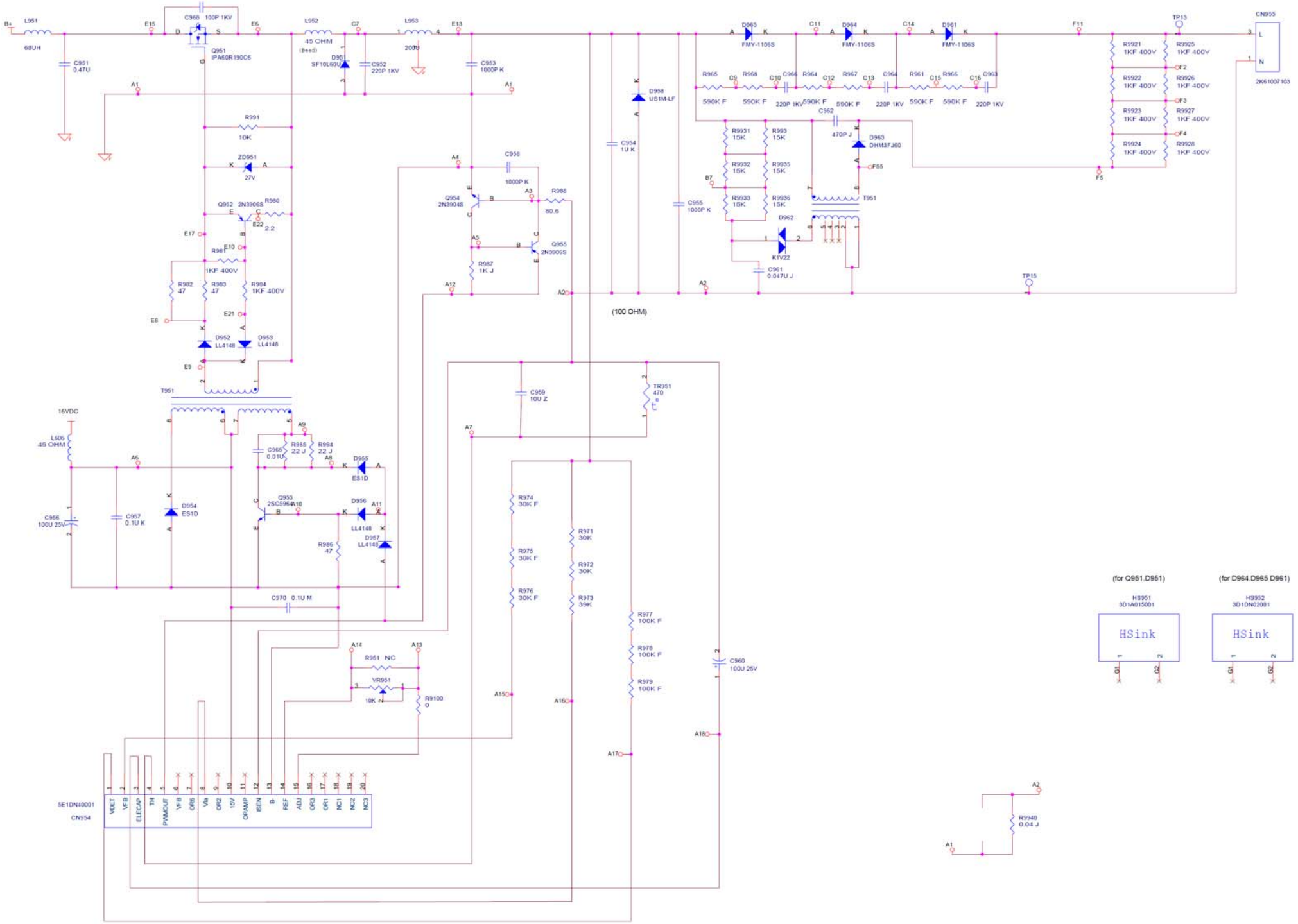
B+
L951
68UH
C951 0.47U
C968 100P 1KV
Q951 IPA60R190C5
L952
45 OHM
(Bead)
D951 SF10L60U
C952 220P 1KV
L953
200Ω
C953 1000P K
D965 FMY-1106S
D964 FMY-1106S
D961 FMY-1106S
D958 US1M-LF
C954 1U K
R965 590K F
R968 590K F
R964 590K F
R967 590K F
R961 590K F
R966 590K F
220P 1KV
R9921 1KF 400V
R9922 1KF 400V
R9923 1KF 400V
R9924 1KF 400V
R9925 1KF 400V
R9926 1KF 400V
R9927 1KF 400V
R9928 1KF 400V
TP13
CN955
2K61007103
R991 10K
ZD951 27V
Q952 2N3906S
R980 2.2
R981 1KF 400V
R982 .47
R983 .47
R984 1KF 400V
D952 LL4148
D953 LL4148
T951
C958 1000P K
Q954 2N3904S
R988 80.6
Q955 2N3906S
R987 1K J
C955 1000P K
R9931 15K
R9932 15K
R9933 15K
R993 15K
R9935 15K
R9936 15K
C962 470P J
D963 DHM3FJ60
T961
D962 K1V22
C961 0.047U J
TP15
(100 OHM)
C959 10U Z
TR951 470
16VDC
L606 .45 OHM
C965 0.01U
R985 22 J
R994 22 J
D955 ES1D
D954 ES1D
C956 100U 25V
C957 0.1U K
Q953 2SC5964-A10
D956 LL4148
D957 LL4148
R986 .47
C970 0.1U M
R974 30K F
R975 30K F
R976 30K F
R971 30K
R972 30K
R973 39K
R977 100K F
R978 100K F
R979 100K F
C960 100U 25V
R951 NC
VR951 10K
R9100 0
5E1DN40001
CN954
VDET
VFB
ELECAP
TH
PWMOUT
VFB
OR6
Va
OR2
15V
OPAMP
ISEN
B-
REF
ADJ
OR3
OR1
NC1
NC2
NC3
(for Q951.D951)
HS951
3D1A015001
HSink
(for D964.D965 D961)
HS952
3D1DN02001
HSink
R9940 0.04 J

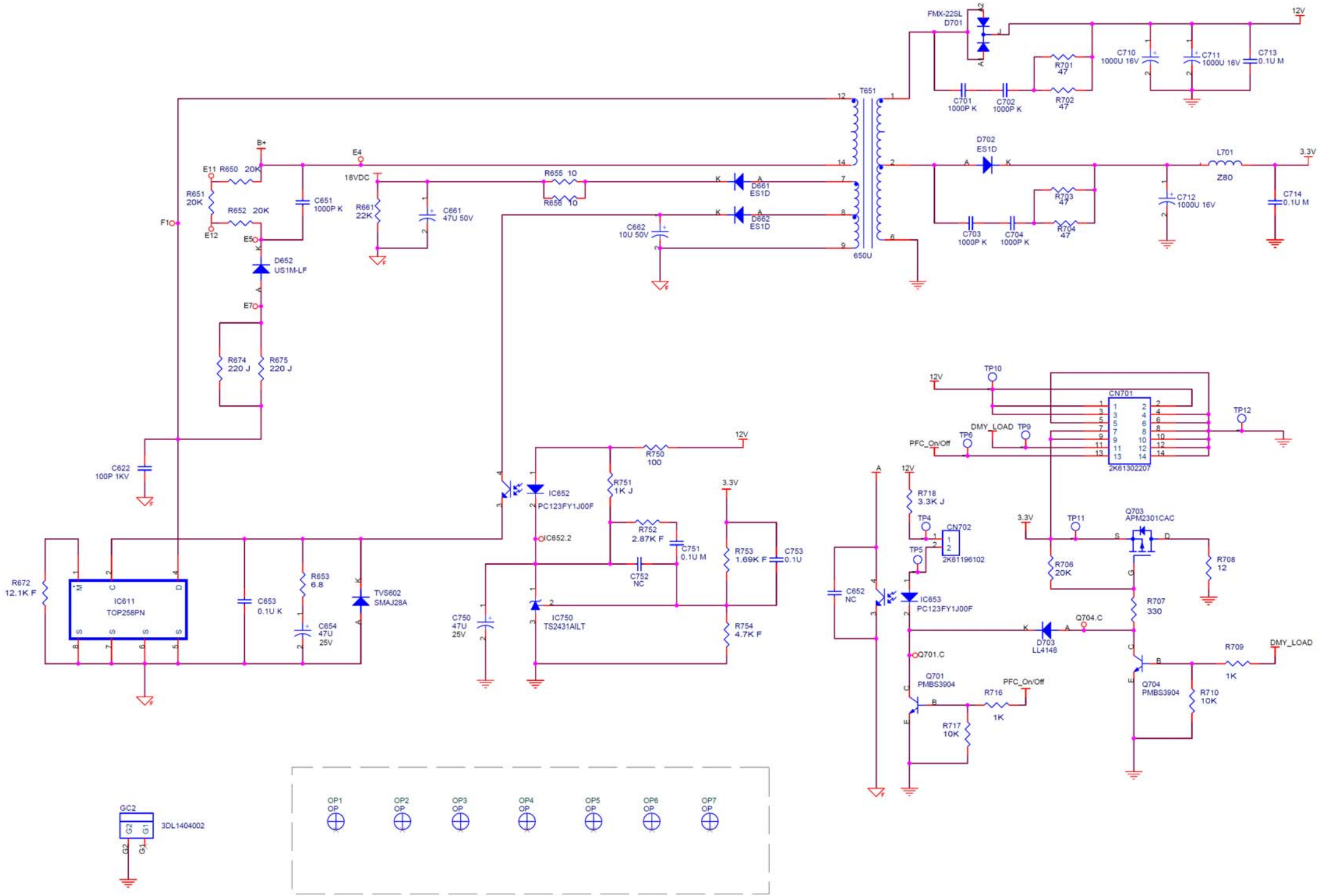
FMX-22SL
D701
12V
C710
1000U 16V
C711
1000U 16V
C713
0.1U M
R701
47
R702
47
C701
1000P K
C702
1000P K
T651
650U
D702
ES1D
L701
Z80
3.3V
C712
1000U 16V
C714
0.1U M
R703
47
R704
47
C703
1000P K
C704
1000P K
B+
E11
R650 20K
R651
20K
R652 20K
E12
F1
E5
C651
1000P K
D652
US1M-LF
E7
E4
18VDC
R661
22K
C661
47U 50V
R655 10
R656 10
D661
ES1D
D662
ES1D
C662
10U 50V
R674
220 J
R675
220 J
C622
100P 1KV
R672
12.1K F
IC611
TOP258PN
C653
0.1U K
R653
6.8
C654
47U
25V
TVS602
SMAJ28A
R750
100
12V
IC652
PC123FY1J00F
R751
1K J
IC652.2
R752
2.87K F
C751
0.1U M
C752
NC
3.3V
R753
1.69K F
C753
0.1U
C750
47U
25V
IC750
TS2431AILT
R754
4.7K F
TP10
12V
CN701
2K61302207
TP12
DMY_LOAD
TP9
PFC_On/Off
TP6
R718
3.3K J
TP4
CN702
2K61196102
TP5
3.3V
TP11
Q703
APM2301CAC
R706
20K
R708
12
C652
NC
IC653
PC123FY1J00F
R707
330
Q704.C
D703
LL4148
Q701.C
R709
1K
DMY_LOAD
Q701
PMBS3904
PFC_On/Off
R716
1K
R717
10K
Q704
PMBS3904
R710
10K
GC2
3DL1404002
OP1
OP
OP2
OP
OP3
OP
OP4
OP
OP5
OP
OP6
OP
OP7
OP

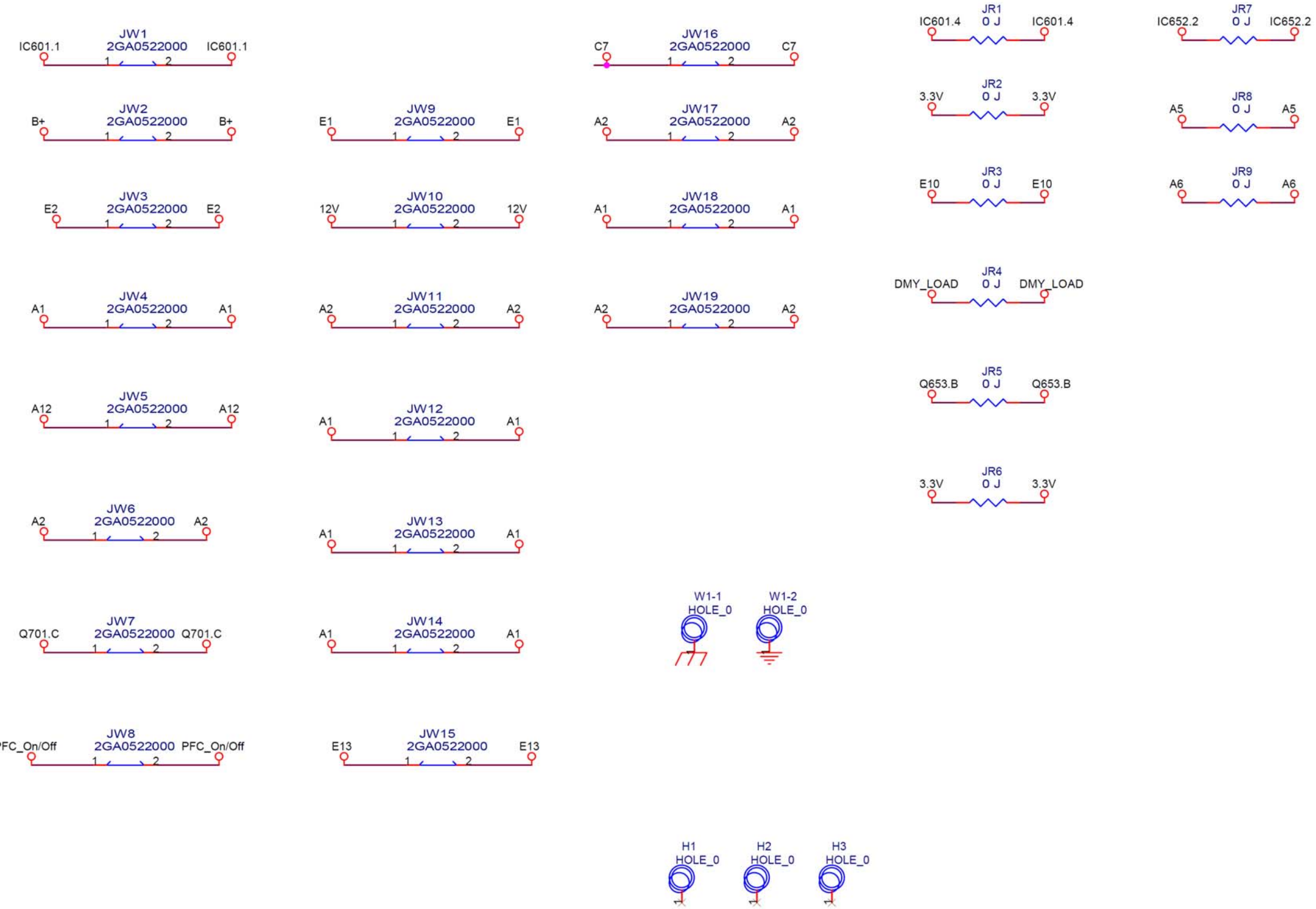
JW1
IC601.1
2GA0522000
IC601.1
1
2
JW2
B+
2GA0522000
B+
JW3
E2
2GA0522000
E2
JW4
A1
2GA0522000
A1
JW5
A12
2GA0522000
A12
JW6
A2
2GA0522000
A2
JW7
Q701.C
2GA0522000
Q701.C
JW8
PFC_On/Off
2GA0522000
PFC_On/Off
JW9
E1
2GA0522000
E1
JW10
12V
2GA0522000
12V
JW11
A2
2GA0522000
A2
JW12
A1
2GA0522000
A1
JW13
A1
2GA0522000
A1
JW14
A1
2GA0522000
A1
JW15
E13
2GA0522000
E13
JW16
C7
2GA0522000
C7
JW17
A2
2GA0522000
A2
JW18
A1
2GA0522000
A1
JW19
A2
2GA0522000
A2
JR1
IC601.4
0 J
IC601.4
JR2
3.3V
0 J
3.3V
JR3
E10
0 J
E10
JR4
DMY_LOAD
0 J
DMY_LOAD
JR5
Q653.B
0 J
Q653.B
JR6
3.3V
0 J
3.3V
JR7
IC652.2
0 J
IC652.2
JR8
A5
0 J
A5
JR9
A6
0 J
A6
W1-1
HOLE_0
W1-2
HOLE_0
H1
HOLE_0
H2
HOLE_0
H3
HOLE_0

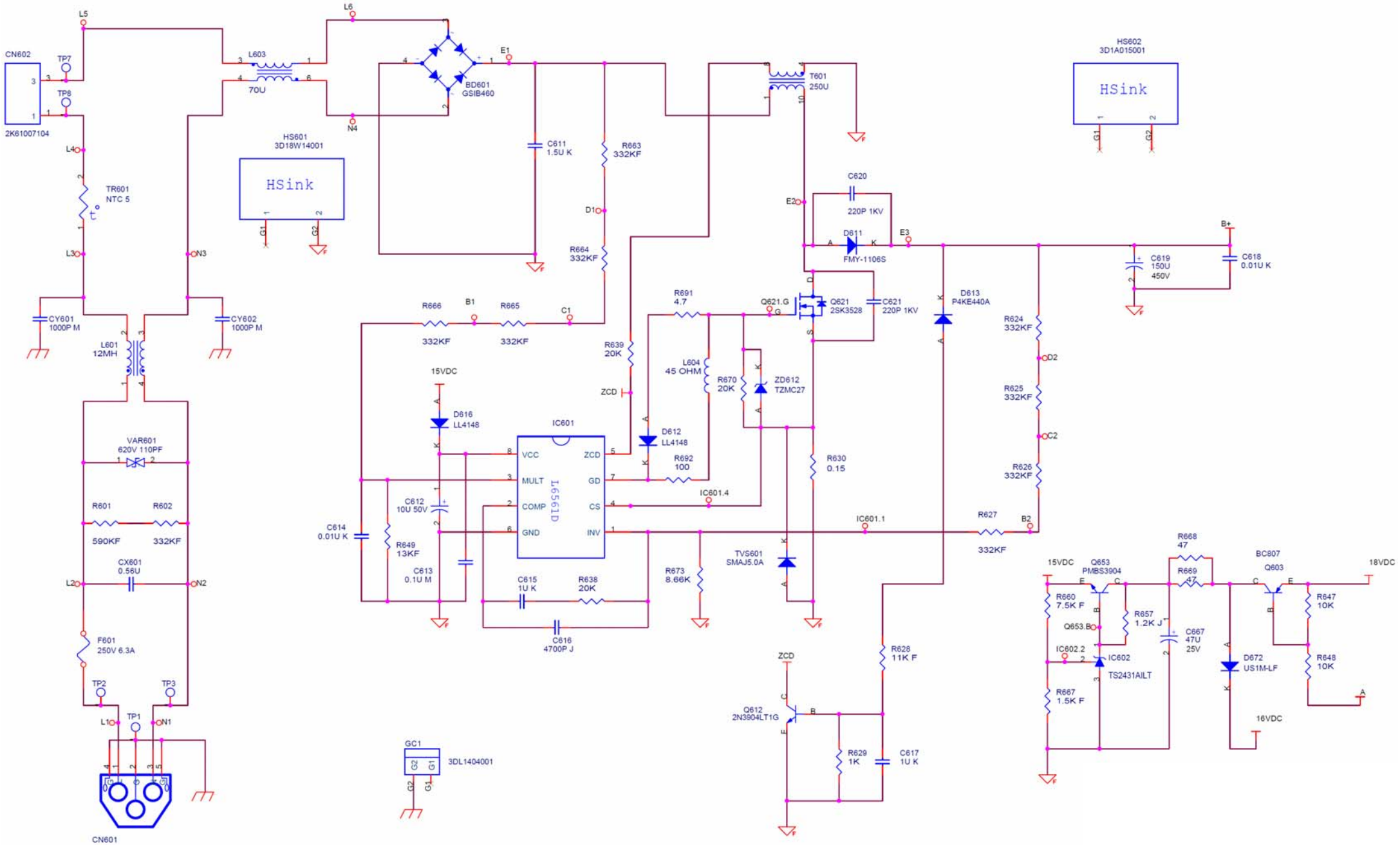
CN602
2K61007104
TP7
TP8
L5
L4
L3
TR601
NTC 5
CY601
1000P M
CY602
1000P M
L601
12MH
VAR601
620V 110PF
R601
590KF
R602
332KF
CX601
0.56U
L2
N2
F601
250V 6.3A
TP2
TP3
L1
TP1
N1
CN601
L603
70U
L6
N4
BD601
GSIB460
E1
HS601
3D18W14001
HSink
G1
G2
C611
1.5U K
R663
332KF
D1
R664
332KF
T601
250U
HS602
3D1A015001
HSink
G1
G2
C620
220P 1KV
E2
D611
FMY-1106S
E3
B+
C619
150U
450V
C618
0.01U K
R666
332KF
B1
R665
332KF
C1
R691
4.7
Q621.G
Q621
2SK3528
C621
220P 1KV
D613
P4KE440A
R624
332KF
D2
R625
332KF
C2
R626
332KF
R639
20K
ZCD
L604
45 OHM
R670
20K
ZD612
TZMC27
15VDC
D616
LL4148
IC601
VCC
MULT
COMP
GND
ZCD
GD
CS
INV
L6561D
D612
LL4148
R692
100
IC601.4
R630
0.15
C612
10U 50V
C614
0.01U K
R649
13KF
C613
0.1U M
C615
1U K
R638
20K
C616
4700P J
R673
8.66K
IC601.1
R627
332KF
B2
TVS601
SMAJ5.0A
R628
11K F
ZCD
Q612
2N3904LT1G
R629
1K
C617
1U K
GC1
3DL1404001
G2
G1
15VDC
Q653
PMBS3904
R660
7.5K F
Q653.B
IC602.2
R667
1.5K F
R657
1.2K J
IC602
TS2431AILT
R668
47
R669
47
C667
47U
25V
BC807
Q603
D672
US1M-LF
16VDC
R647
10K
R648
10K
18VDC
A

PCB Artwork: Main Board

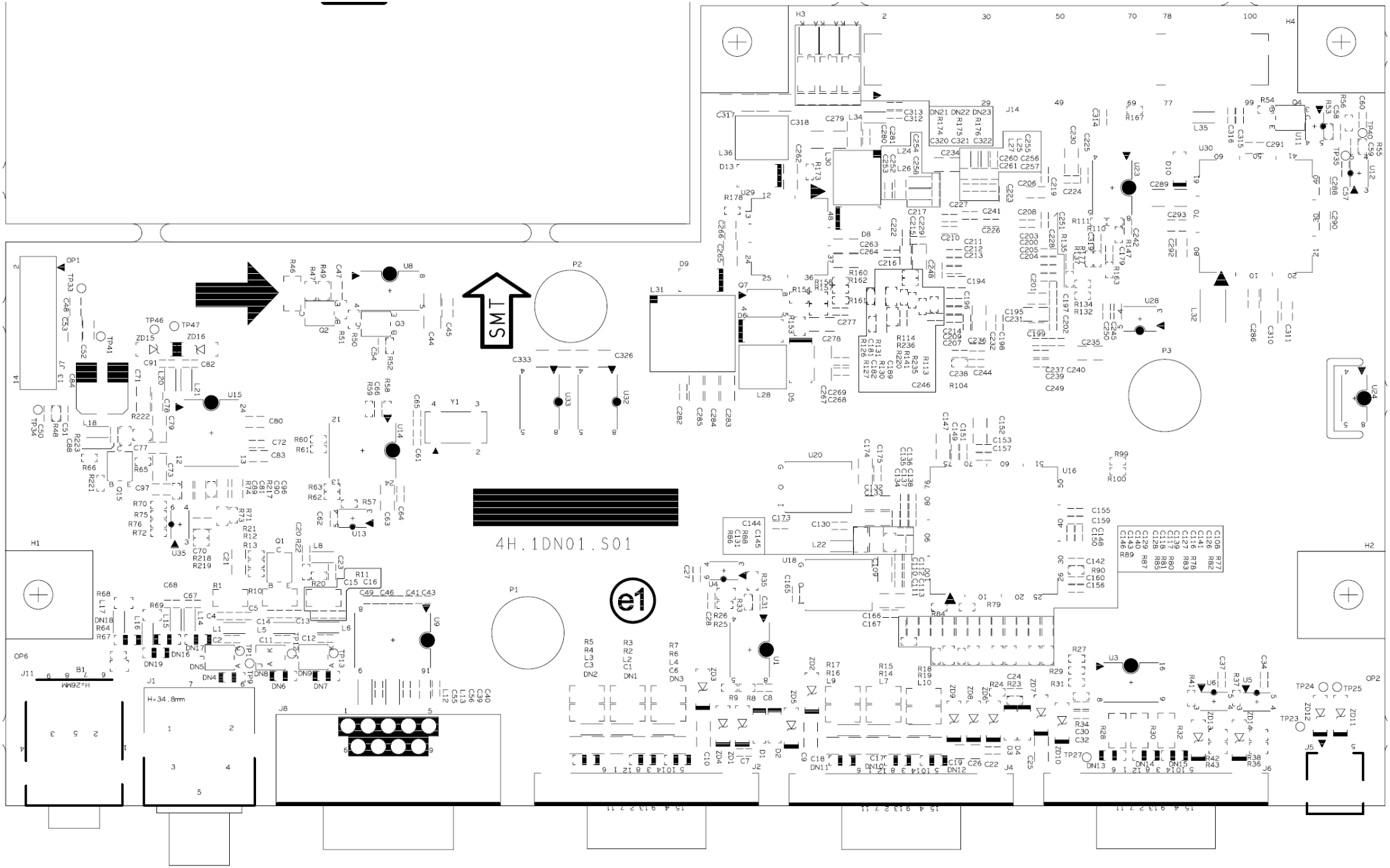

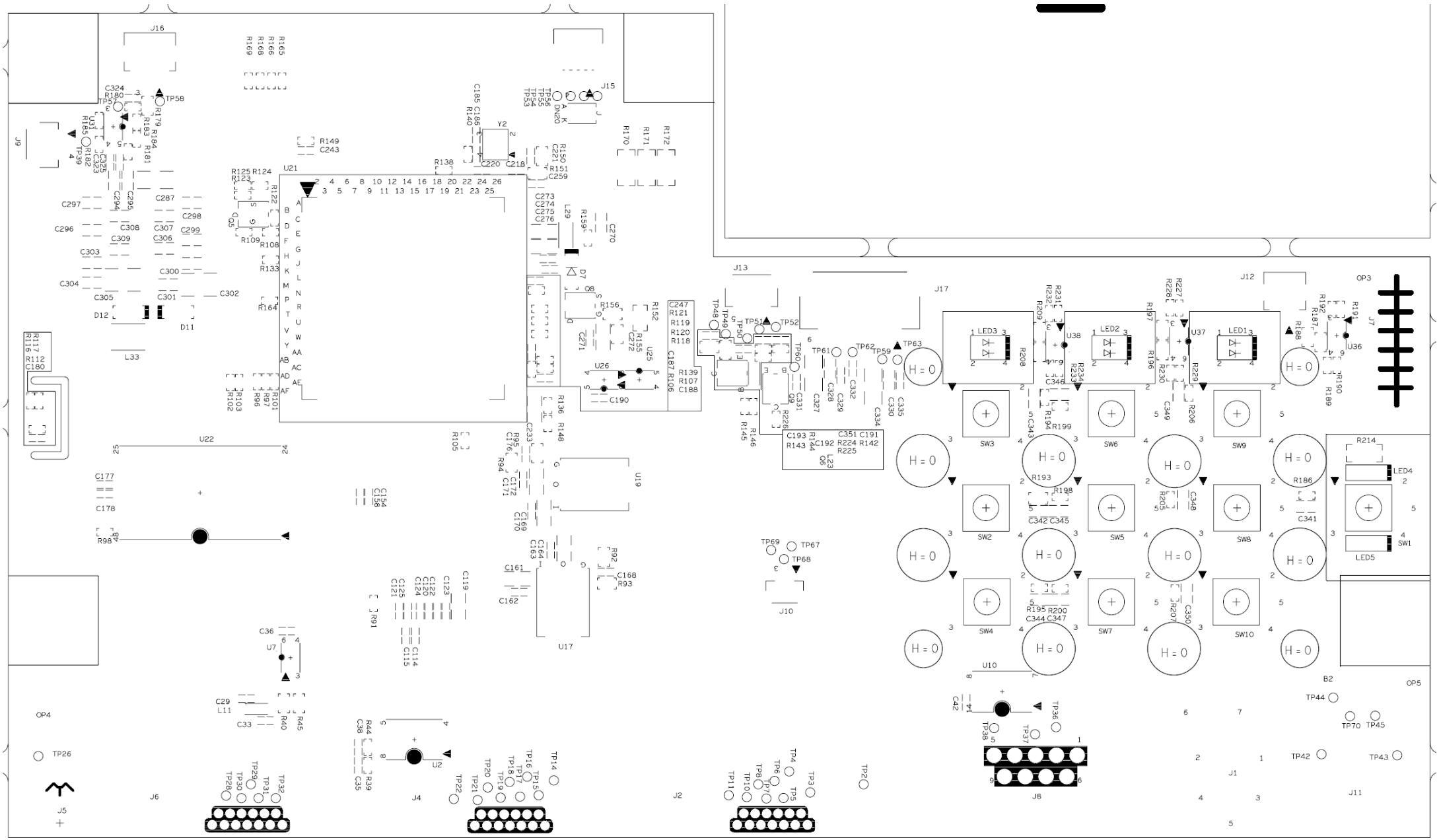

Power Board

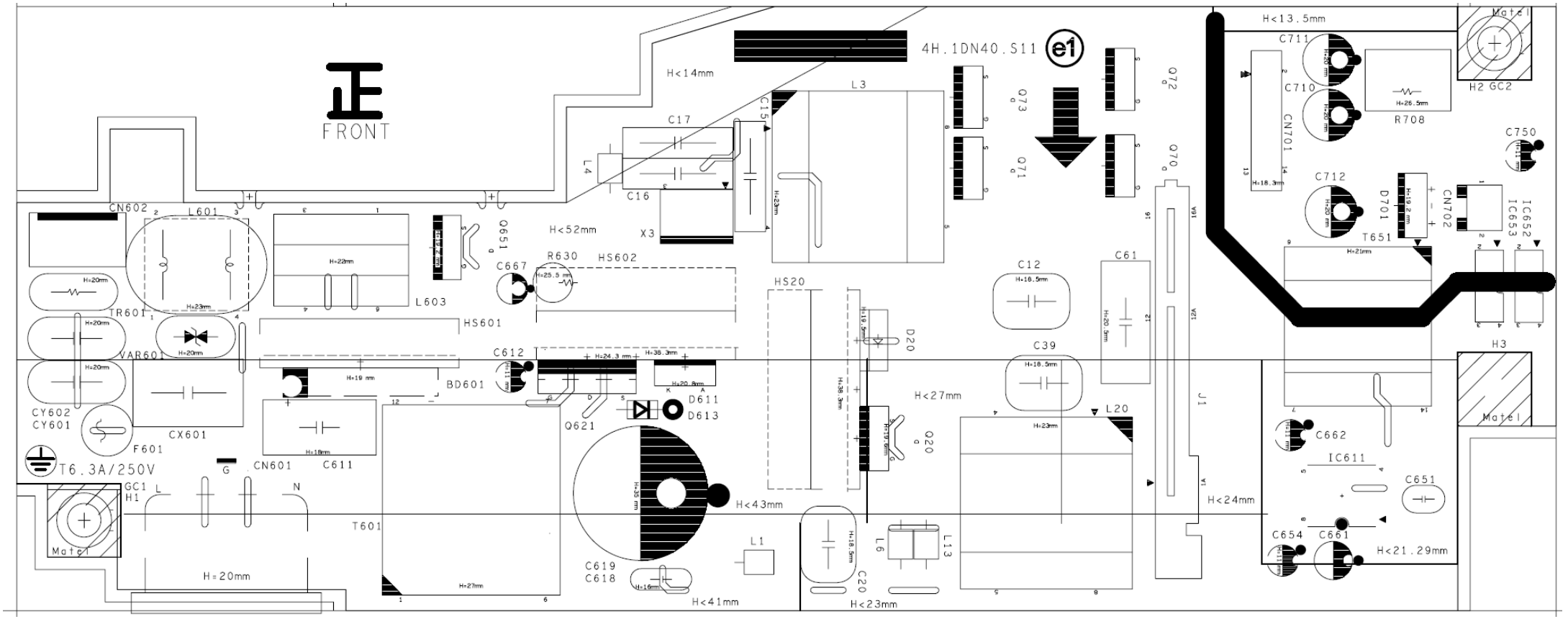

FRONT
4H.1DN40.S11
e1
H<14mm
H<13.5mm
H<52mm
H<27mm
H<43mm
H<24mm
H<21.29mm
H<41mm
H<23mm
H=20mm
CN602
L601
TR601
VAR601
CY602
CY601
F601
CX601
T6.3A/250V
GC1
H1
L
N
G
CN601
C611
T601
L603
HS601
BD601
C612
Q651
C667
R630
HS602
C17
C16
L4
C15
L3
X3
HS20
D20
Q20
D611
D613
Q621
C619
C618
L1
C20
L6
L13
C12
C39
C61
L20
J1
Q73
Q71
Q72
Q70
C711
C710
CN701
R708
H2 GC2
C750
C712
D701
CN702
IC652
IC653
T651
H3
C662
IC611
C651
C654
C661
Matel

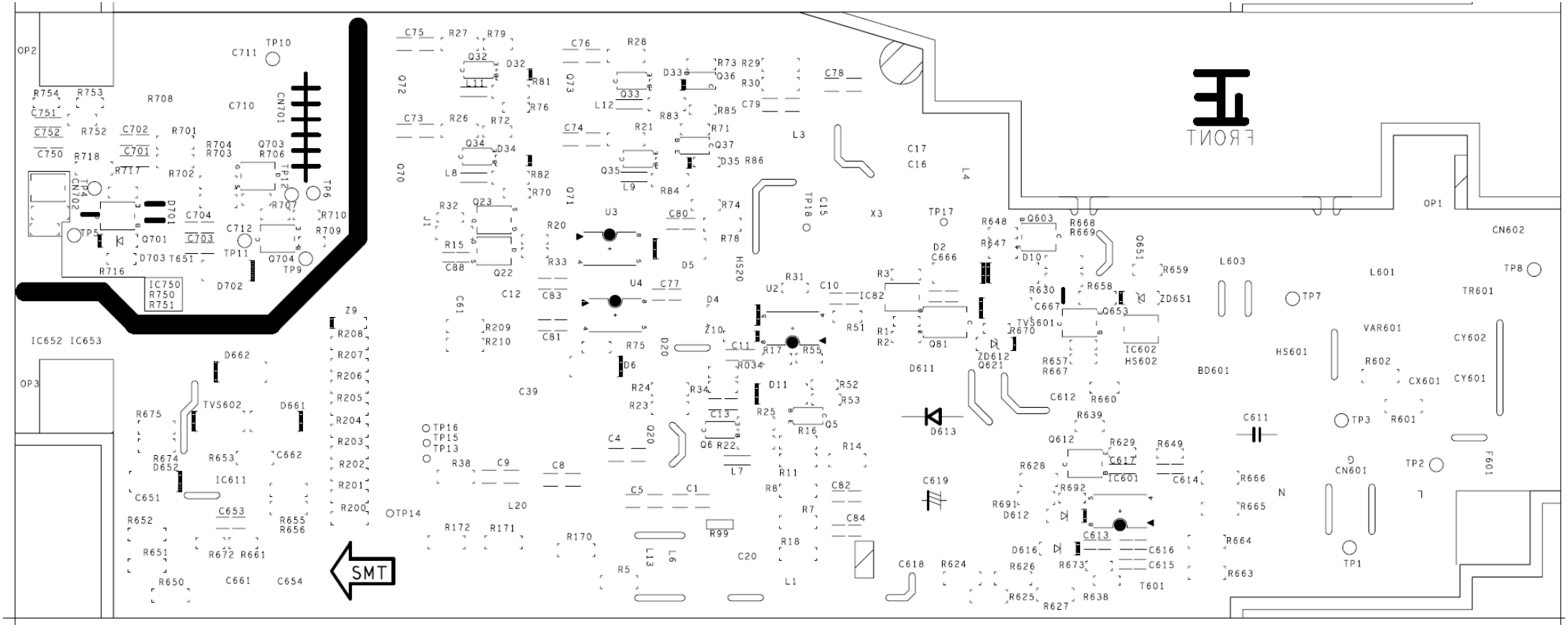
SMT
FRONT
IC750
R750
R751
IC652 IC653
OP1
OP2
OP3
CN602
TR601
L601
L603
HS601
VAR601
CY602
CY601
CX601
BD601
CN601
F601
TP1
TP2
TP3
TP7
TP8
IC602
HS602
IC601
T601
TVS602
TVS601
IC611
IC82
ZD651
ZD612
Q621
Q653
Q603
Q651
Q81
Q612
D613
D611
C611
C612
C613
C614
C615
C616
C617
C618
C619
C666
C667
R630
R658
R659
R668
R669
R670
R657
R667
R639
R660
R649
R629
R628
R692
R691
R612
R616
R626
R673
R625
R627
R638
R666
R665
R664
R663
R648
R647
D10
D2
X3
TP17
TP18
C15
C16
C17
L4
L3
U2
U3
U4
IC10
R31
R51
R1
R2
R3
Z10
D4
D5
D6
D20
HS20
C10
C11
C12
C13
C39
C61
C77
C80
C81
C83
C88
R17
R55
R034
R74
R78
R75
R20
R33
R15
R32
Q22
Q23
J1
Q70
Q71
Q72
Q73
L8
L9
L11
L12
Q32
Q33
Q34
Q35
Q36
Q37
D32
D33
D34
D35
R70
R71
R72
R73
R76
R81
R82
R83
R84
R85
R86
C73
C74
C75
C76
C78
C79
R21
R26
R27
R28
R29
R30
TP16
TP15
TP13
TP14
R38
C9
C8
C4
C5
C1
L20
L7
Q20
Q5
Q6
R22
R23
R24
R25
R16
R14
R11
R8
R7
C82
C84
R18
R5
L13
L6
R99
R170
R171
R172
C20
L1
R34
D11
R52
R53
C701
C702
C703
C704
C710
C711
C712
C750
C751
C752
C753
C754
C755
C756
C757
C758
C759
C760
C761
C762
C763
C764
C765
C766
C767
C768
C769
C770
C771
C772
C773
C774
C775
C776
C777
C778
C779
C780
C781
C782
C783
C784
C785
C786
C787
C788
C789